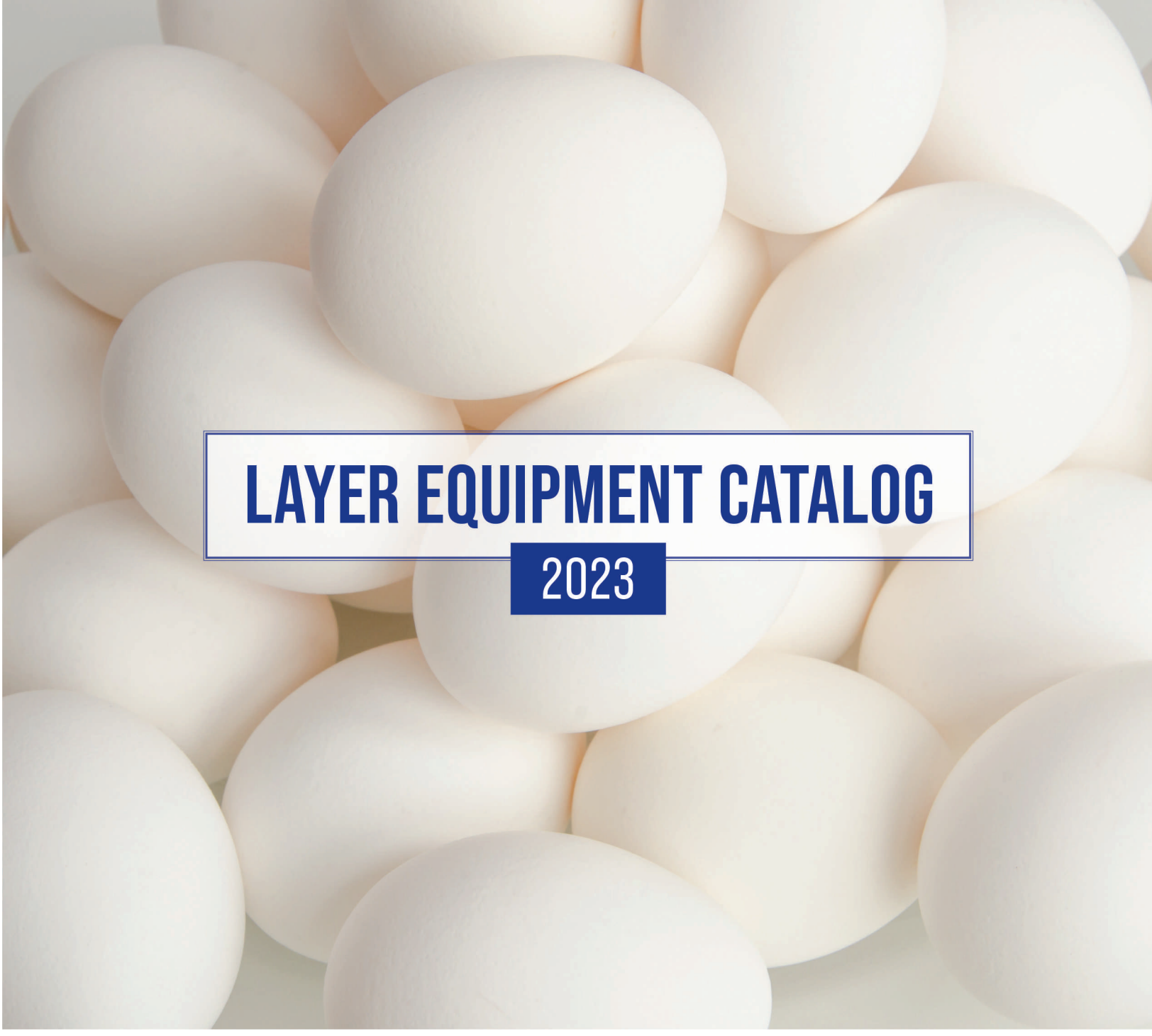

LAYER EQUIPMENT CATALOG

2023

HOG SLAT®

GEORGIA® POULTRY EQUIPMENT CO.

EASTERN SHORE Poultry services

SHOP A LOCAL STORE NEAR YOU.

- **Midwest Region Swine Parts & Products Questions (866) 464-7528**
- **North Carolina Region Swine Parts & Products Questions (800) 949-4647**
- **Poultry Parts, Equipment & Products Questions (866) 850-4446**

ALABAMA
Chancellor, AL 855-513-9919
Holly Pond, AL 855-675-0505
Ider, AL 888-394-7458
Ozark, AL 334-443-0240
Petrey, AL 334-335-2294
Spruce Pine, AL 256-331-2817

ARKANSAS
Berryville, AR 855-929-6283
Clarksville, AR 877-206-9804
Hindsville, AR 877-717-2031
Mansfield, AR 479-269-2047
Siloam Springs, AR 877-373-6655

DELAWARE
Harrington, DE 844-816-0589
Laurel, DE 844-816-0590

FLORIDA
Live Oak, FL 866-416-8369

GEORGIA
Bowdon, GA 877-405-2867
Calhoun, GA 866-667-8159
Douglas, GA 866-416-8371
Ellijay, GA 866-417-1427
Glennville, GA 866-417-1428
Lexington, GA 866-417-1377
Lula, GA 770-869-1113
Moultrie, GA 866-697-4614
Roberta, GA 800-856-6106
Royston, GA 866-850-4446

ILLINOIS
Newton, IL 618-783-2200
Pittsfield, IL 877-385-4144
Rochelle, IL 866-285-7017

INDIANA
Flora, IN 866-960-3776

IOWA
Algona, IA 888-838-6489
Bloomfield, IA 888-660-1475
Carroll, IA 877-792-0590
Charles City, IA 855-228-2700
Decatur City, IA 888-446-3940
Hartley, IA 877-728-2105
Humboldt, IA 800-294-4014
Independence, IA 319-332-1400
Iowa Falls, IA 877-648-3560
Le Mars, IA 855-573-9366
Marcus, IA 888-376-2558
Monticello, IA 866-465-9100
Rock Rapids, IA 888-472-4229
Sac City, IA ..... **Coming Soon**
Sibley, IA ..... **Coming Soon**
Sioux Center, IA 800-598-4187
Storm Lake, IA 866-697-1891
Washington, IA 866-368-7124

KANSAS
Seneca, KS 785-336-0082

KENTUCKY
Mayfield, KY 833-228-0438

LOUISIANA
Dubach, LA 318-777-1212

MARYLAND
Pocomoke City, MD 844-816-0591

MICHIGAN
Three Rivers, MI 269-273-7277

MINNESOTA
Blooming Prairie, MN 866-705-1655
Fairmont, MN 866-461-4448
Mankato, MN 855-588-8733
Pipestone, MN 877-562-4203
Redwood Falls, MN 866-929-1350
Sauk Centre, MN 844-388-7620
Waseca, MN 507-835-8015
Worthington, MN 507-376-2200

MISSOURI
Wheaton/Exeter,MO 417-652-3080

MISSISSIPPI
Bay Springs, MS 866-568-7985
Brookhaven, MS 888-354-0398
Forest, MS 844-777-6761
Kokomo, MS 601-731-3003
Magee, MS 866-795-0604
Philadelphia, MS 855-230-6306
Waynesboro, MS 855-230-6307

NEBRASKA
Richland, NE 402-563-4533
West Point, NE 855-372-6988

NORTH CAROLINA
Aulander, NC 866-901-0092
Bethel, NC 855-271-7781
Beulaville, NC 866-569-2741
Biscoe, NC 877-710-0288
Clinton, NC 866-831-9169
Elizabethtown, NC 877-773-2720
Goldsboro, NC 800-722-0646
Laurinburg, NC 910-405-7515
Newton Grove, NC 800-949-4647
Rose Hill, NC 800-779-4657
Siler City, NC 800-854-3425
Taylorsville, NC 844-594-7241
Yadkinville, NC 844-528-3518

OHIO
Union City, OH 866-968-3895

OKLAHOMA
Guymon, OK 877-732-7677
Spiro, OK 918-962-8036

SOUTH CAROLINA
Hartsville, SC 844-677-2555

SOUTH DAKOTA
Beresford, SD 605-763-2017
Mitchell, SD 844-831-0457

TENNESSEE
Shelbyville, TN 866-693-2175

TEXAS
Marquez, TX 903-529-1175
Nacogdoches, TX 936-569-8770
Pittsburg, TX 844-320-5511

UTAH
Beaver, UT 435-438-4055

VIRGINIA
Bridgewater, VA 540-879-9901
Harrisonburg, VA 540-434-4423

HOG SLAT CANADA
Mitchell, ON 519-348-8483

©2023 Hog Slat, Inc. All rights reserved. Any reproduction or duplication of this publication is strictly prohibited without the written permission from Hog Slat, Inc. Every attempt is made to insure the accuracy of descriptions and pricing in this catalog. Typographical errors do occur. We reserve the right to change pricing based on market fluctuation or printing error.

Layer Sales Contacts

LAYER PARTS & REMODELS

Contact	Region	Phone Number
Dane Schipper	Midwest Sales Manager	641-426-6849
Dave Nicks	Midwest/Western US Region	712-540-9327
Aaron Moystner	Ohio Region	260-251-2390
Craig Bentley	Southeast Region	866-850-4446
Billy Farmer	Southeast Region	912-393-5546

LAYER NEW CONSTRUCTION & REMODELS

Contact	Region	Phone Number
Matt Holderman	Midwest Sales Manager	515-890-4028
Colby Elliot	IA, MN, WI Region	641-220-1220

SHOP ONLINE 24/7

WWW.HOGSLAT.COM

Order from your computer, tablet or smartphone and we'll ship direct to your door. Sign up for email specials!

GrowerSELECT®, Georgia Poultry Equipment Co.® are trademarks owned by Hog Slat Inc. Replacement parts listed with these marks are designed to fit and function in place of original equipment manufacturers replacement parts. Chore-Time® and Roxell® are the registered trademarks of CTB INC., a company not affiliated with Hog Slat Inc. AP®, Cumberland® & Hired Hand® are registered trademarks of The GSI Group, LLC, a company not affiliated with Hog Slat Inc. AcmeFan® is the registered trademark of Acme Engineering & Mfg. Corp. INC., a company not affiliated with Hog Slat Inc. Aerotech Ventilation Systems® is a registered trademark of Munter Corporation, a company not affiliated with Hog Slat Inc.

QUICK INDEX

4-17 Feed Systems
18-19 Egg Belting
20-27 Collector Systems
28-67 Ventilation Systems
68-77 Heating
78-84 Watering
85-90 Medicators
91-94 Plumbing
95-96 Manure Handling
97-103 Lighting/Electrical
104-109 Biosecurity
110-111 Supplies
112-119 Rodenticides & Insecticides
120-123 Animal Handling & Supplies
124 Building Supplies
125-126 Incinerators
127 Roller Chain
128 High Pressure Systems
129-132 Egg Handling
133-137 Processing

FEED BINS

Bulk Feed Solutions

The heaviest grade of feed bins available on the market today. Longer lasting feed bins built with 5–10% more steel, by weight, than competitive brands. Built entirely of high tensile Structural Steel Grade 55 with a G100 galvanized finish. G100 bins have a galvanized coating that is 10% thicker than competitor brands, resulting in a longer lifespan.

Manufactured in-house for complete control of raw material purchasing and manufacturing operations. State-of-the-art rolling, stamping and finishing operations ensure precise fit and finish of feed bin components. Available in 6′, 7′, 9′ and 12′ diameter sizes.

In many locations, a local store offers assembly and delivery to your farm or building project.

FEED BINS

Capacity based on 40 lbs./Cubic Feet

*Ladder kits must be purchased separately from feed bins. *All feed bins with a fill height exceeding 25′ require purchase of ladder kit with safety cage.

ITEM#	TONS	CUBIC FEET	FILL HEIGHT (FT./IN.)
6 FT. DIAMETER FEED BINS WITH 60° HOPPER			
GST-616016K	3	150	11′ 6″
GST-626016K	4.5	225	14′ 2″
GST-636016K	6	300	16′ 10″
GST-646016K	7.5	375	19′ 6″
7 FT. DIAMETER FEED BINS WITH 67° HOPPER			
GST-716716K	4.9	245	14′ 9″
GST-726716K	6.9	345	17′ 5″
GST-736716K	9	450	20′ 1″
GST-746716K	11	550	22′ 9″
GST-756716K	13	650	25′ 5″
GST-766716K	15	750	28′ 1″

ITEM#	TONS	CUBIC FEET	FILL HEIGHT (FT./IN.)
9 FT. DIAMETER FEED BINS WITH 60° HOPPER			
GST-916016K	8.5	425	15′ 7″
GST-926016K	12	600	18′ 3″
GST-936016K	15	750	20′ 11″
GST-946016K	18.5	925	23′ 7″
GST-956016K	22	1100	26′ 3″
GST-966016K	25.5	1278	28′ 11″
12 FT. DIAMETER FEED BINS WITH 60° HOPPER			
GST-1216016K	17.5	875	19′ 5″
GST-1226016K	23.5	1175	22′ 1″
GST-1236016K	29.5	1475	24′ 9″
GST-1246016K	35.5	1775	27′ 5″
GST-1256016K	41.5	2075	30′ 1″
GST-1266016K	47.5	2375	32′ 9″

Poly Feed Bin Lid

Georgia Poultry's new Poly Feed Bin Lid is the first bin lid to combine the benefits of a positive locking, rugged polyethylene lid with a flat sliding design that prevents damage from fill augers. Poly Feed Bin Lid opens on a stainless steel pivot rod and slides flat against the bin roofline. Unique stainless steel locking spring holds the lid in place preventing rain, snow, and moisture from entering the feed bin. Hog Slat's Poly Feed Bin Lid easily retrofits to replace the lids on most existing feed bins.

See It In Action!
YouTube:
Hog Slat
Poly Bin Lid

BinTrac®

Bin Weighing System

From a single bin to a multi-site system with remote monitoring, BinTrac can be configured to meet your needs now and in the future.

BinTrac Features:

- Easy installation on existing and loaded bins using patented load cell bracket assembly
- Real-time bin inventory by weight
- 24-hour feed use for each of the past 4 days
- Feed delivery validation
- One-year warranty covers lightning damage to load cells – 2-year extended warranty available
- Requires no calibration

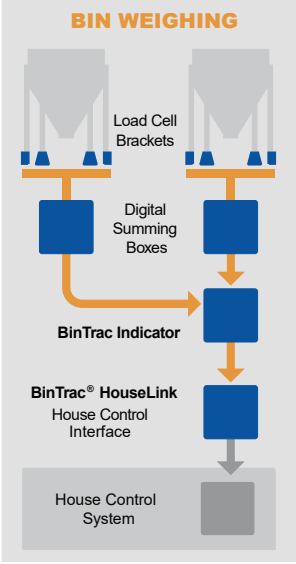

KIT REPLAY OUTPUT

Item#	Description
KIT-000028	Kit Relay Output

LOAD CELL ASSEMBLY & MOUNTING BRACKET

- For "W" style legs
- Easily installs on existing & loaded bins
- The bracket is the lifting mechanism
- Requires less than 1/2" bin lift
- Simplifies equal loading
- No shimming or blocking
- Field calibration is not required
- Temperature compensated load cell

Item#	Description
MLB-200000	10K Load
MLB-300000	15K Load

DIGITAL SUMMING BOX

Converts analog signal to digital for measuring and averaging load cell output.

Item#	Description
MSA-004000	4 load cell
MSA-006000	6 load cell
MSA-008000	8 load cell

PS17 POWER SUPPLY

Converts 115/230V to 12.6VDC to operate BinTrac system.

Item#	Description
ASY-000237	1115/230VAC to 12.6 VDC

BINTRAC INDICATOR

Indicator connects up to 4 bins and can be located up to 250 feet from bins.

Item#	Description
MCA-000001	w/standard pro software

BINTRAC INDICATOR, LARGE SCREEN

Indicator connects up to 4 bins and can be located up to 250 feet from bins. Features large 0.56 inch digits for ease of viewing. New 6 digit display for bin applications exceeding 99,999 lbs.

Item#	Description
MCA-000301	Large Screen

BINTRAC BREEDER CONTROL

With user programmable batching weight and scheduled batching.

Item#	Description
MCA-000201	w/ standard software

REPLACEMENT LOAD CELL

Item#	Description
ASY-000127	5K Load Cell
ASY-000129	10k Load Cell
ASY-000159	15k Load Cell

LOAD CELL TESTER

Item#	Description
LCT001A	Load Cell Tester

INTERFACE CABLE

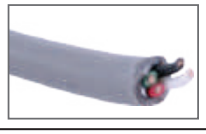

Item#	Description
CAB-000009	Interface Cable, 22AWG 4 Conductor Shielded/ft.
DS22204	Sensor wire 22/4 Shielded/ft.
DS21804-1000	Sensor wire 18/4 1000 ft. roll (for runs over 250')

BridgRid uses a powerful vibrating action to eliminate bridging in feed bins.

A) Powerful motor with mounting bracket

The exterior plate is shaped to fit just inside the sloped panel's seams. The interior plate's larger dimensions allow for distribution of any stress points and uses existing bin bolts to tie directly into the bin structure.

B) Interior Components

The interior components transfer vibration evenly while agitating the material in the bin.

C) Vibration Motor Control

- Measures the amount of vibration the system is delivering
- Turns system off when it reaches a predetermined level of vibration
- **FULLY AUTOMATED, MONITORS FEED SYSTEM 24/7**

D) Flo-sensors

Sensors monitor feed flow and auger rotation to vibrate the bin only when needed.

Item #	Description
#BR-FF115V	Finish feed kit 115V (motor, mounting brackets and interior components)
#BR-FF220V	Finish feed kit 220V (motor, mounting brackets and interior components)
#BR-FS300	Flo-Sensor for model 75 & 300 pipe
#BR-FS350	Flo-Sensor for model 90 & 350 pipe
#BR-VMC	Vibration motor control

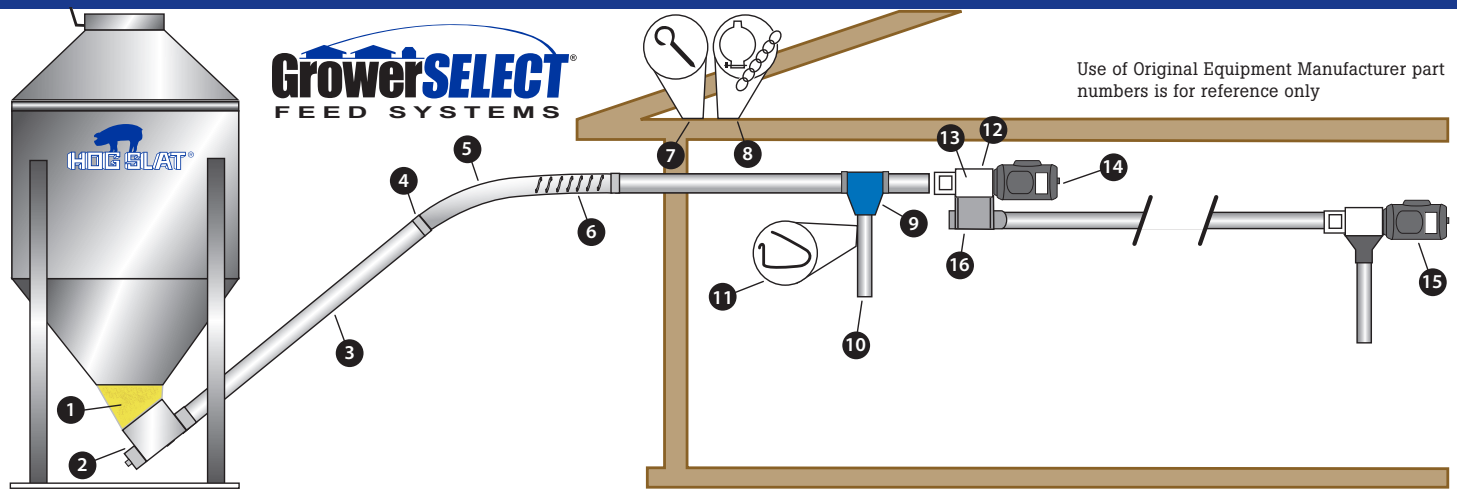

Use of Original Equipment Manufacturer part numbers is for reference only

Model	Tube Dia (OD)	Capacity Lbs /Min	Motor Sizing/Hp	Max System Length	Max Extension Length
MODEL 55	2-1/4"	15	1/3	150'	185'
			1/2	250'	285'
MODEL 75	3"	50	1/2	80'	125'
			3/4	150'	185'
			1	200'	245'
MODEL 90	3-1/2"	100	1/2	30'	65'
			3/4	90'	125'
			1	150'	185'
MODEL HR	3-1/2"	50	1/2	30'	55'
			3/4	90'	105'
			1	150'	185'

1) Upper Boots

- Fits 16" bin openings. Available in three different material types.
- Clear polycarbonate, Translucent polyethylene or black polyethylene.
- Black double straight boot has a 14" diameter.

Item #	Description	Chore-Time®	AP®
HS524	Clear 30°	4347C	FLX-2194C
HS793T	Translucent 30°	-	FLX-2194T
HS793	Black 30°	4347	FLX-2194
HS525	Clear straight	6093C	FLX-2195C
HS794T	Translucent straight	-	FLX-2195T
HS794	Black straight	-	FLX-2195
HS662	Black double boot	-	FLX-4869

Hardware Package

Includes:
18) 5/16" x 3/4" zinc plated bolts, washers & nylon nuts.

#HS530 .....Hardware pkg. upper boot
AP.....FLX-2196

⚠ WARNING:
This product can expose you to chemicals, including nickel, which is known to the State of California to cause cancer and birth defects or other reproductive harm. For more information, go to www.P65Warnings.ca.gov

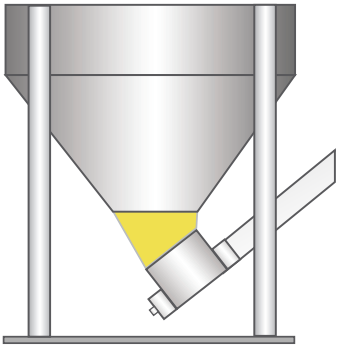

SINGLE

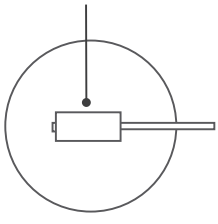

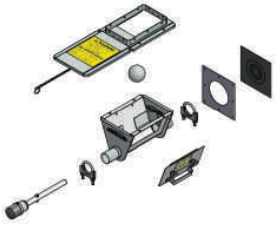

2) Single Unloader Kits

A) Single Unloader w/ Anchor Bearings and Transfer Plate

#HS556KIT.....Model 55
#HS520KIT.....Model 75
#HS520PKIT.....Model 75 (Pellet)
#HS557KIT.....Model 90
#HS557HRKIT.....Model HR
#HS554KIT.....Model 108
#HS220SOKIT.....Model 220
#HS300S.....Model 300
#HS350SOKIT.....Model 350

⚠ WARNING:
This product can expose you to chemicals, including nickel, which is known to the State of California to cause cancer and birth defects or other reproductive harm. For more information, go to www.P65Warnings.ca.gov

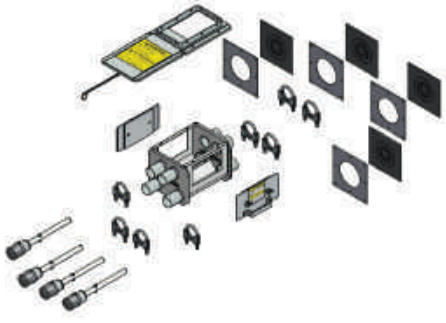

Quad Unloader w/ Anchor Bearings and Transfer Plate

#HS522KIT.....Model 55

⚠ WARNING:
This product can expose you to chemicals, including nickel, which is known to the State of California to cause cancer and birth defects or other reproductive harm. For more information, go to www.P65Warnings.ca.gov

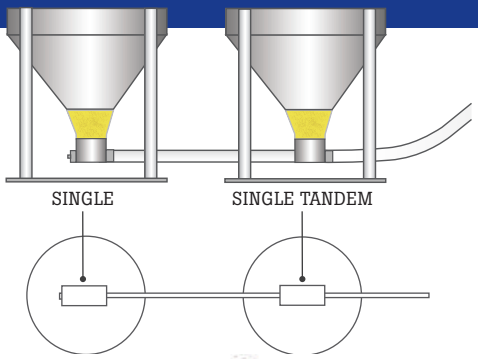

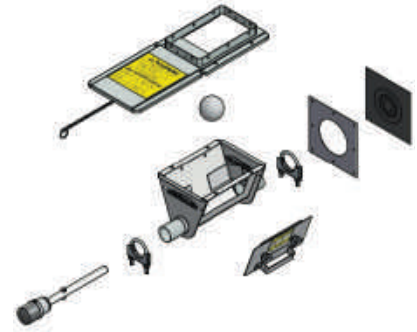

A) Single Unloader with Anchor Bearings and Transfer Plate

#HS556KIT ..... Model 55
#HS520KIT ..... Model 75
#HS520PKIT ..... Model 75 (Pellet)
#HS557KIT ..... Model 90
#HS557HRKIT ..... Model HR
#HS554KIT ..... Model 108
#HS220SOKIT ..... Model 220
#HS300SOKIT ..... Model 300
#HS350SOKIT ..... Model 350

⚠ WARNING:
This product can expose you to chemicals, including nickel, which is known to the State of California to cause cancer and birth defects or other reproductive harm. For more information, go to www.P65Warnings.ca.gov

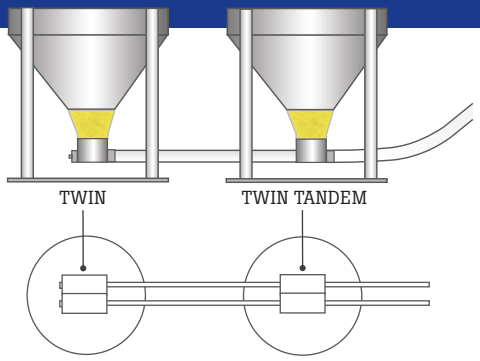

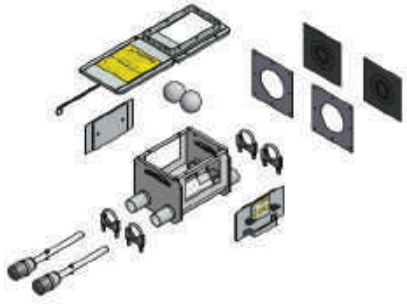

C) Twin Unloader with Anchor Bearing, Transfer Plate & Baffles

#HS555KIT ..... Model 55
#HS521KIT ..... Model 75
#HS521PKIT ..... Model 75 (Pellet)
#HS558KIT ..... Model 90
#HS558HRKIT ..... Model HR
#HS220TOKIT ..... Model 220
#HS300TOKIT ..... Model 300
#HS350TOKIT ..... Model 350

⚠ WARNING:
This product can expose you to chemicals, including nickel, which is known to the State of California to cause cancer and birth defects or other reproductive harm. For more information, go to www.P65Warnings.ca.gov

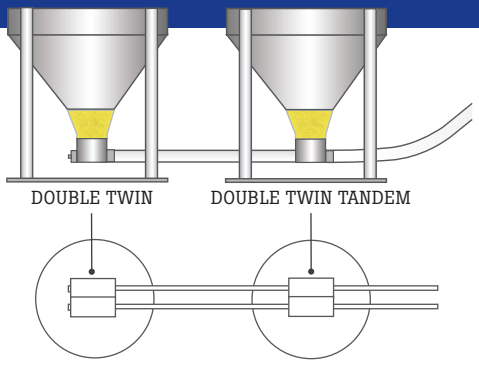

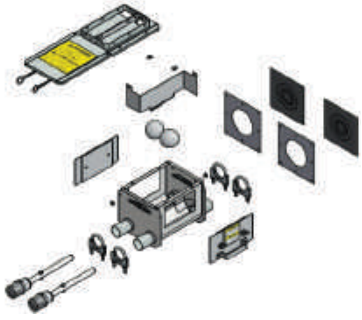

E) Twin Unloader with Anchor Bearing & Double Transfer Plate

#HS555KITDT ..... Model 55
#HS521KITDT ..... Model 75
#HS521PKIT ..... Model 75 (Pellet)
#HS558KITDT ..... Model 90
#HS558HRKITDT ..... Model HR
#HS220TOKITDT ..... Model 220
#HS300TOKITDT ..... Model 300
#HS350TOKITDT ..... Model 350

⚠ WARNING:
This product can expose you to chemicals, including nickel, which is known to the State of California to cause cancer and birth defects or other reproductive harm. For more information, go to www.P65Warnings.ca.gov

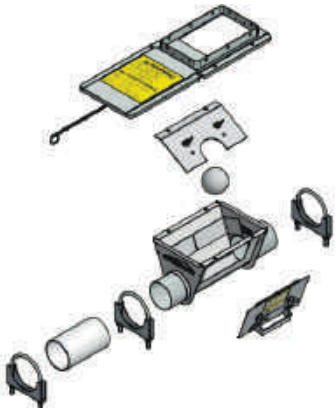

B) Single Tandem Unloader with Transfer Plate

#HS556TKIT ..... Model 55
#HS520TKIT ..... Model 75
#HS520PTKIT ..... Model 75 (Pellet)
#HS557TKIT ..... Model 90
#HS557HRTKIT ..... Model HR
#HS220SOKIT ..... Model 220
#HS300STKIT ..... Model 300
#HS350STKIT ..... Model 350

⚠ WARNING:
This product can expose you to chemicals, including nickel, which is known to the State of California to cause cancer and birth defects or other reproductive harm. For more information, go to www.P65Warnings.ca.gov

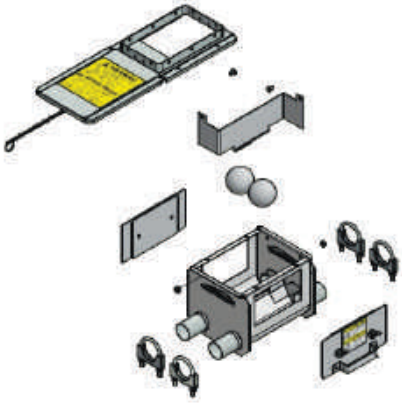

D) Twin Tandem Unloader with Transfer Plate

#HS555TKIT ..... Model 55
#HS521TKIT ..... Model 75
#HS558TKIT ..... Model 90
#HS558HRTKIT ..... Model HR
#HS220TTKIT ..... Model 220
#HS300TTKIT ..... Model 300
#HS350TTKIT ..... Model 350

⚠ WARNING:
This product can expose you to chemicals, including nickel, which is known to the State of California to cause cancer and birth defects or other reproductive harm. For more information, go to www.P65Warnings.ca.gov

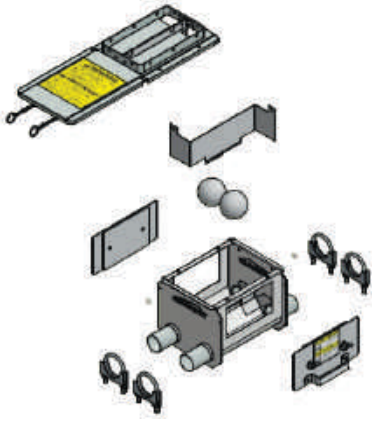

F) Twin Tandem Unloader with Double Transfer Plate

#HS555TKITDT ..... Model 55
#HS521TKITDT ..... Model 75
#HS558TKITDT ..... Model 90
#HS558HRTKITDT ..... Model HR
#HS220TTKITDT ..... Model 220
#HS300TTKITDT ..... Model 300
#HS350TTKITDT ..... Model 350

⚠ WARNING:
This product can expose you to chemicals, including nickel, which is known to the State of California to cause cancer and birth defects or other reproductive harm. For more information, go to www.P65Warnings.ca.gov

#HSAB45UP

#HSAB55C

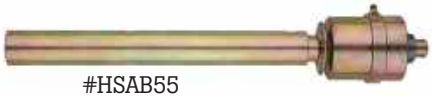
#HSAB55

#HSAB55CF

#HSAB75C

#HSAB300

#HSAB75-OS

#HSAB75CP

#HSAB75C-1

#HSAB90U

#HSAB350

#HSAB90U-HR

#HSAB90S

#HSAB108

#HSAB108E

⚠ WARNING:
This product can expose you to chemicals, including nickel, which is known to the State of California to cause cancer and birth defects or other reproductive harm. For more information, go to www.P65Warnings.ca.gov

Anchor Bearing Assembly

Item #	Description	Chore-Time®	AP®
HSAB45UP	Feedline	6817	07098932
HSAB55C	Model 55	39405	FLX-4879
HSAB55	Model 55	–	FLX-4646
HSAB55CF	Model 55 – flag	39408	–
HSAB75C	Model 75	37346	FLX-4648C
HSAB300	Model 300	–	FLX-4648
HSAB350	Model 350	–	FLX-4650
HSAB75-OS	Model 300 (old style)	–	FLX-2227

Item #	Description	Chore-Time®	AP®
HSAB75CP	M75 / pellet	–	–
HSAB75C-1	Replacement Hub Mdl 75	–	–
HSAB90U-1	Replacement Hub Mdl 90	–	–
HSAB90U	Model 90	35343	–
HSAB90U-HR	High Roughage (M90 Boot & M75 Auger)	–	FLX-4648HR
HSAB90S	Model 90 – Screener	35345	–
HSAB108	Model 108 – Unrestricted	35766	–
HSAB108E	Model 108 – Restricted	35767	–

SINGLE

NOW AVAILABLE IN STAINLESS STEEL

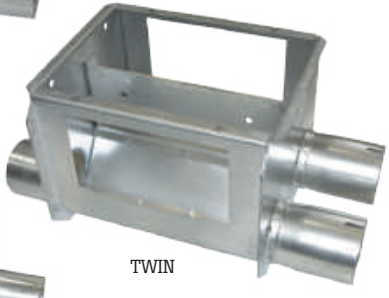
TWIN

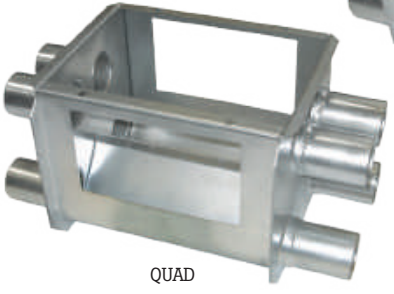
QUAD

⚠ WARNING:
This product can expose you to chemicals, including nickel, which is known to the State of California to cause cancer and birth defects or other reproductive harm. For more information, go to www.P65Warnings.ca.gov

Boot Body Weldments

Item #	Description	Chore-Time®	AP®
SINGLE			
HS220S	Single Model 220	–	FLX-4331
HS556A	Single Model 55	7999	–
HS556SS	Single Model 55 – SS	7999SS	–
HS300S	Single Model 300	–	FLX-4669
HS300S-SS	Single Model 300 – SS	–	–
HS520	Single Model 75	36588	–
HS520SS	Single Model 75 – SS	36588SS	–
HS350S	Single Model 350	–	FLX-2053
HS557	Single Model 90	8873	FLX-2053
HS554	Single Model 108	30386	–
TWIN			
HS220T	Twin Model 220	–	FLX-3938
HS555A	Twin Model 55	7998	–
HS300T	Twin Model 300	–	FLX-4761
HS300T-SS	Twin Model 300 – SS	–	–
HS300TB	Twin Model 300 w/ baffles	–	FLX-4761B
HS300TBSS	Twin Model 300 w/ baffles – SS	–	–
HS521	Twin Model 75	36350	–
HS350T	Twin Model 350	–	FLX-2116
HS558	Twin Model 90	36354	–
HS735	Twin Model 108	35617	–
QUAD			
HS522	Quad Model 55	7980	–

3) 10′ Straight PVC Tube

Item #	Description	Chore-Time®	AP®
HSAT55-S	Model 55, 2-1/4″ OD	7955	PVC-1004
HSAT75-S	Model 75, 3″ OD	6516	PVC-1005
HSAT90-S	Model 90, 3-1/2″ OD	6293	PVC-1006
HSAT108-S	Model 108, 4-1/2″ OD	34547	–

Use of Original Equipment Manufacturer part numbers is for reference only.

DROP TUBE

Drop tube part number combinations that make up the telescoping drops.

A – Drop Tube Adaptor
B – Top Tube
C – Bottom Tube
D – Clips

MODEL	A	B	C	D	SINGLE TUBE
55	HS655	HSDT005	HSDT003	60638	HSDT005
75	HS675	HSDT005	HSDT003	60638	HSDT005
90	HS690	HSDT001	HSDT006	60638	HSDT001
HR	HS690	HSDT001	HSDT006	60638	HSDT001
Control Unit		HSDT001	HSDT006	60638	HSDT001

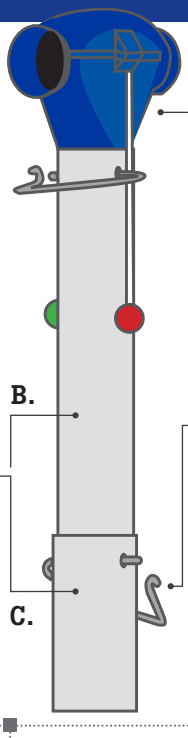

A. Drop Tube Adaptor

Item#	Description	Chore-Time®	AP®
HS655	M55/220	43455C	FLX-2432
HS675	M75/300	43475C	AP-2276 & FLX-2433
HS690	M90/350	43490C	FLX-2434

B. DROP TUBE & C. BOTTOM TUBE

Item#	Description	Chore-Time®	AP®
HSDT001	3.937″ ID x 4.125″ OD x 12′	–	AP-1766
HSDT002	3″ ID x 3.188″ OD x 12′	1932	FLX-2425
HSDT003	3.562″ ID x 3.750″ OD x 12′	6381	FLX-2427
HSDT004	3.937″ ID x 4.125″ OD x 6′	–	FLX-2428
HSDT005	3.313″ ID x 3.5″ OD x 6′	–	FLX-2426
HSDT006	4.187″ ID x 4.375″ OD x 12′	–	FLX-2429

D. WIRE PIN

Item#	Description	Chore-Time®	AP®
60638	4″ for attaching drop tubes	41657	–

⚠ WARNING:
This product can expose you to chemicals, including nickel, which is known to the State of California to cause cancer and birth defects or other reproductive harm. For more information, go to www.P65Warnings.ca.gov

TRANSFER PLATE AND SLIDE ASSEMBLY

Single transfer plate assembly with slide gate. Use with all GrowerSELECT® models. Includes hardware kit.

Item#	Description	Chore-Time®	AP®
HS523	Single transfer plate assembly	6284	BLK-11137
HS523SS	Stainless steel single assembly	–	–

⚠ WARNING:
This product can expose you to chemicals, including nickel, which is known to the State of California to cause cancer and birth defects or other reproductive harm. For more information, go to www.P65Warnings.ca.gov

DOUBLE TRANSFER PLATE ASSEMBLY

Two independent slides allow separate control of two augers passing through unloader.

Item#	Description	Chore-time®	AP®
HS541	Double transfer plate assembly	36683	FLX-4234
HS541SS	Stainless steel double assembly	–	–

⚠ WARNING:
This product can expose you to chemicals, including nickel, which is known to the State of California to cause cancer and birth defects or other reproductive harm. For more information, go to www.P65Warnings.ca.gov

NOW AVAILABLE IN STAINLESS STEEL OR CLEAR PLASTIC

ACCESS COVER FOR BOOT WELDMENTS

Item#	Description	Chore-Time®	AP®
HS526	Galv. access cover	6197	FLX-4239
HS526C	Clear access cover	–	FLX-5127
HS526SS	Stainless steel cover	–	–

⚠ WARNING:
This product can expose you to chemicals, including nickel, which is known to the State of California to cause cancer and birth defects or other reproductive harm. For more information, go to www.P65Warnings.ca.gov

SLIDE GATES

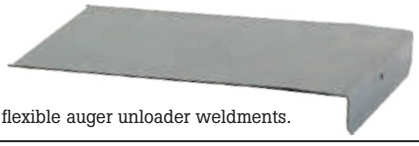

Replacement slide gates for flexible auger unloader weldments.

Item#	Description	Chore-Time®	AP®
HS523-12	Single, 11.31″ x 6.6″	4357	–
HS523SS-12	Single stainless steel	–	–
HS523-17	Double, 11.31″ x 3.125″	–	–
HS523SS-17	Double stainless steel	–	–
HS523-25	Single, 11.91″ x 6.1″	–	FLX-4782
HS451	Double, 11.25″ x 3.25″	–	FLX-4320

⚠ WARNING:
This product can expose you to chemicals, including nickel, which is known to the State of California to cause cancer and birth defects or other reproductive harm. For more information, go to www.P65Warnings.ca.gov

FLEXIBLE DROP TUBE

Item#	Description	Chore-Time®	AP®
HSFLX-2563F	3″ ID, Galv. (25′ roll)	7497	FLX-2563
HSFLX-2564F	3-1/2″ ID, Galv. (25′ roll)	6383	FLX-2564

⚠ WARNING:
This product can expose you to chemicals, including nickel, which is known to the State of California to cause cancer and birth defects or other reproductive harm. For more information, go to www.P65Warnings.ca.gov

3″ AGITATOR BALL

Cannonball agitator for feed bin unloading boot weldment. Helps keep feed flowing and prevent bridging.

Item#	Description	Chore-Time®	AP®
HS527	3″ Agitator Ball	3531	00404238

⚠ WARNING:
This product can expose you to chemicals, including nickel, which is known to the State of California to cause cancer and birth defects or other reproductive harm. For more information, go to www.P65Warnings.ca.gov

Chore-Time is the registered trademark of CTB INC., a company not affiliated with Hog Slat, Inc. Cumberland is a part of GSI, a worldwide brand of AGCO, a company not affiliated with Hog Slat, Inc. GrowerSELECT and Georgia Poultry Equipment Co. are trademarks owned by Hog Slat, Inc. Replacement parts listed with these marks are designed to fit and function in place of original equipment manufacturers replacement parts.

10′ STRAIGHT PVC TUBE

A special formulation of blended PVC provides a durable feed tube that is wear resistant and UV stablized. Pre-formed bell ends eliminate the need for extra pipe couplers.

Item#	Description	Chore-Time®	AP®
HSAT55-S	Model 55, 2-1/4″ OD	7955	PVC-1004
HSAT75-S	Model 75, 3″ OD	6516	PVC-1005
HSAT90-S	Model 90, 3-1/2″ OD	6293	PVC-1006
HSAT108-S	Model 108, 4-1/2″ OD	34547	-

PVC ELBOWS

The GrowerSELECT® 45 degree PVC auger tube elbow is designed with a 5′ turn radius to properly bend flexible auger along the feed line. Elbow features a bell end on one side to easily fit onto straight auger tube without a coupler.

Item#	Description	Chore-Time®	AP®
HSAT55-45	Model 55	34855	PVC-1101
HSAT75-45	Model 75	7285	PVC-1001
HSAT90-45	Model 90	7357	PVC-1002
HSAT108-45	Model 108	34546	-
HSAT125-45	Model 125	-	PVC-1003

PVC TUBE COUPLER

Item#	Description	Chore-Time®	AP®
HSAT55-C	Model 55	8029	FLX-2537
HSAT75-C	Model 75	7084	FLX-2538
HSAT90-C	Model 90	7085	FLX-2539
HSAT108-C	Model 108	34557	-
HSAT125-C	Model 125	-	FLX-2540

GEAR HEAD OIL

GrowerSELECT® 15 oz (450ml) gear oil for lubricating gear heads on power drive units. Provides excellent lubrication properties, contains extreme pressure (EP), anti-corrosion and anti-oxidation additives for prolonged gear life and smoother operation.
• SAE 80w-90

Item#	Description	Chore-Time®	AP®
HS450	Gear Head Oil	-	FLX-4471

AUGER TUBE INSERT

Item#	Description	Chore-Time®	AP®
HSAT108INSERT	Model 108	34337	-

GROW-FLEX™ AUGER

GrowerSELECT® Grow-Flex™ auger is engineered to be the strongest and most reliable flexible feed auger on the market today. Our innovative manufacturing process forges a stronger, more durable auger with superior flexing and breaking strength that outperforms standard auger. Grow-Flex™ auger is available to fit most common feed pipe sizes and can be installed in your OEM feed pipe saving you money when it's time to replace your existing auger.

#HSFA-44D

#HSFA-40R

Item#	Description	Chore-Time®	AP®
HSFA-44	Model 44	6820	FLXA-14375
HSFA-44D	Model 44 Drag Auger	-	FLXA-1520
HSFA-44UF	Model 44MM-UP	25058	-
HSFA-55	Model 55	7961	FLXA-1520
HSFA-75	Model 75	4744	FLXA-2390
HSFA-75P	Model 75 (pellet)	-	FLXA-2206
HSFA-90	Model 90	6942	FLXA-2710
HSFA-108	Model 108	30180	-
HSFA-125	Model 125	-	FLXA-3800
HSFA-40R	Model 40 Round Auger	50220-400	-

⚠ WARNING:
This product can expose you to chemicals, including nickel, which is known to the State of California to cause cancer and birth defects or other reproductive harm. For more information, go to www.P65Warnings.ca.gov

COUPLING, DRAG AUGER

Item#	Description	Chore-Time®	AP®
HS878	M55 extended pitch, old C28091-2	-	-

DRAG AUGER CONNECTOR

GrowerSELECT® connector for loop system drag auger. Fits HSFA-44D.

Item#	Description	Chore-Time®	AP®
HS623	Drag Auger Connector Connects to HSFA-44D Drag Auger	24961	-

ROUND AUGER CONNECTOR

Item#	Description	Chore-Time®
HS739	Connects to HSFA-40R Round Auger, Sold each	C48401

Chore-Time is the registered trademark of CTB INC., a company not affiliated with Hog Slat, Inc. Cumberland is a part of GSI, a worldwide brand of AGCO, a company not affiliated with Hog Slat, Inc. GrowerSELECT and Georgia Poultry Equipment Co. are trademarks owned by Hog Slat, Inc. Replacement parts listed with these marks are designed to fit and function in place of original equipment manufacturers replacement parts.

A.

#HS9023C

B.

#HS9020D1

GrowerSELECT®

A) DIRECT DRIVE AUGER MOTORS

2-YEAR WARRANTY

GrowerSELECT® motors feature a stressproof 1144 steel shaft, providing excellent protection from shaft breakage. Motors have permanently lubricated ball bearings for maintenance free long mechanical life.

The motors feature a robust electrical design enabling it to withstand adverse operating conditions. The motor's centrifical starting switch is shielded giving it greater ability to withstand over spin conditions. For safety concerns, all motors also have manual overload protection for prevention of accidental restarting.

Item#	HP	Shaft Size	Wt.	F.L. Amps	Chore-Time®	AP®	Valco
HS9020A	1/3	1/2"	21	5.3/2.6-2.6	4229	FLX-4763	735390
HS9021C	1/2	1/2"	23	8.6/4.2-4.3	5050C	FLX-4764	735391
HS9022A	3/4	1/2"	31	10.6/5.4-5.3	5051	FLX-4765	735392
HS9023C	1	5/8"	40	14/6.9-7.0	6857	FLX-4766	735393
HS9024A	1-1/2	5/8"	44	16.2/8.6-8.1	8782C	FLX-2473	

B) DIRECT DRIVE POWER UNITS

Item#	Description	Chore-Time®	AP®
HS9021D8	1/2 HP Model 75 & 90	3259-50	FLX-2673
HS9022D8	3/4 HP Model 75 & 90	3259-136	FLX-2674
HS9023D8	1 HP Model 75 & 90	-	FLX-3629

B) DIRECT DRIVE POWER UNIT, 352 RPM

Item#	Description	Chore-Time®	AP®
HS9020D1	1/3 HP Model 55	3259-34	FLX-2458
HS9021D1	1/2 HP Model 55	3259-39	FLX-2459
HS9022D2	3/4 HP Model 75 & 90	3259-52	FLX-2460
HS9023D2	1 HP Model 75 & 90	3259-49	FLX-2461

⚠ WARNING:
This product can expose you to chemicals, including nickel, which is known to the State of California to cause cancer and birth defects or other reproductive harm. For more information, go to www.P65Warnings.ca.gov

3 PHASE AUGER MOTORS

Item#	HP	RPM	Voltage
N9321	1/2	1725/1425	60/50HZ
HS9322	3/4	1725/1425	60/50HZ
HS9323	1	1725/1425	60/50HZ
HS9324	1-1/2	1725/1425	60/50HZ
HS9075 (Marathon)	1/3	1725/1425	60/50HZ

⚠ WARNING:
This product can expose you to chemicals, including nickel, which is known to the State of California to cause cancer and birth defects or other reproductive harm. For more information, go to www.P65Warnings.ca.gov

AUGER GEAR HEADS

Item #	Description	Chore-Time®	AP®	Big Dutchman®	Valco®
HSGR001	352 RPM, Mdl 55	3261-5	-	-	-
HSGR002	352 RPM, Mdl 75/90	3261-7	-	-	-
HSGR003	358 RPM, Poultry w/ clamp	-	0040408	-	-
HSGR004	358 RPM	-	FLX-4277	-	-
HSGR005	216 RPM	-	-	-	-
HSGR009	358/296 RPM at 60/50 Hz - 58	-	-	11-00-1005A	-
HSGR010	693/573 RPM at 60/50 Hz	3261-17	-	-	-
HSGR011	266/222 RPM at 60/50 Hz - 58	-	-	86-00-2667	-
HSGR012	266/222 RPM at 60/50 Hz	-	FLX-4403	-	-
HSGR014	441/364 RPM at 60/50 Hz - 78	-	FLX-4405	-	-
HSGR015	256/213 RPM at 60/50 Hz - 58	-	-	-	-
HSGR016	216/179 RPM at 60/50 Hz - 58	3261-1	-	-	-
HSGR017	156/130 PRM at 60/50 Hz - 78	-	-	-	-
HSGR021	62/52 RPM at 60/50 Hz- 78	3261-9	-	-	-
HSGR022	657/542 RPM At 60/50 Hz 3/4"	-	-	-	450369
HSGR023	358/296 RPM At 60/50 Hz 7/8"	-	-	86-00-2584	-

⚠ WARNING:
This product can expose you to chemicals, including nickel, which is known to the State of California to cause cancer and birth defects or other reproductive harm. For more information, go to www.P65Warnings.ca.gov

PINION GEARS

Item #	Description	Chore-Time®	AP®	Big Dutchman®	Valco®
HSP01	Straight pinion, 1/2" ID	-	FLX-4275	-	-
HSP02	Straight pinion, 5/8" ID	-	FLX-4276	11-00-9364	-
HSP03	Helical pinion, 1/2" ID	5046	-	-	-
HSP04	Helical pinion, 5/8" ID	6104	-	-	-
HSP05	Straight pinion, 1/2" ID	3249	-	-	-
HSP06	Straight, 1.812" long, 1/2" ID	-	FLX-2983	11-00-9151	-
HSP07	Straight, 14 tooth x 2.25" long, 5/8" ID	-	FLX-2973	86-00-0205	-
HSP08	Straight, 14 tooth x 3" long, 5/8" ID	-	FLX-4542	-	-
HSP09	Straight 14 teeth 1/2" bore 2.170" long	-	-	10-00-9613	450366

⚠ WARNING:
This product can expose you to chemicals, including nickel, which is known to the State of California to cause cancer and birth defects or other reproductive harm. For more information, go to www.P65Warnings.ca.gov

Chore-Time is the registered trademark of CTB INC., a company not affiliated with Hog Slat, Inc. Cumberland is a part of GSI, a worldwide brand of AGCO, a company not affiliated with Hog Slat, Inc. GrowerSELECT and Georgia Poultry Equipment Co. are trademarks owned by Hog Slat, Inc. Replacement parts listed with these marks are designed to fit and function in place of original equipment manufacturers replacement parts.

US Motors

- Totally Enclosed Fan Cooled
- Class B Insulation
- Manual Reset Thermal Overload Protector
- ODE Shaft Extension for Hand Crank
- Ball Bearings
- Reversible Rotation
- 1-Year Warranty

N9020
HP: 1/3
Shaft Size: 1/2"
F.L. Amps: 5.9/2.6
Volts: 115/230
Frame: 56Y

N9021
HP: 1/2
Shaft Size: 1/2"
F.L. Amps: 8.6/4.3
Volts: 115/230
Frame: 56Y

N9022
HP: 3/4
Shaft Size: 1/2"
F.L. Amps: 10.6/5.3
Volts: 115/230
Frame: 56Y

N9023
HP: 1
Shaft Size: 5/8"
F.L. Amps: 12.89/6.5-6.4
Volts: 115/208-230
Frame: 56Y

N9024
HP: 1-1/2
Shaft Size: 5/8"
F.L. Amps: 16.2/8.1
Volts: 115/230
Frame: 56Y

Leeson Motors

- Totally Enclosed Fan Cooled
- Class B Insulation
- Manual Reset Thermal Overload Protector
- ODE Shaft Extension for Hand Crank
- Ball Bearings
- Reversible Rotation
- 2 Year Warranty

LE9021
HP: 1/3
Shaft Size: 1/2"
F.L. Amps: 5.9/2.6
Volts: 115/230
Frame: 56Y

LE9022
HP: 1/2
Shaft Size: 1/2"
F.L. Amps: 8.6/4.3
Volts: 115/230
Frame: 56Y

LE9023
HP: 3/4
Shaft Size: 1/2"
F.L. Amps: 10.6/5.3
Volts: 115/230
Frame: 56Y

LE9024
HP: 1
Shaft Size: 5/8"
F.L. Amps: 12.89/6.5-6.4
Volts: 115/208-230
Frame: 56Y

DROP TUBE CONTROL SWITCH

Simple feed tube control mounts to power unit feed cone for accurate control of feed systems. Assembly features 15" long molded poly housing with 20 amp snap switch. Complete with watertight control box and 36" pigtail cord. Prewired "Normally Closed" 110/220 Volt, 20 Amps max. CSA Certified 597.

⚠ WARNING:
This product can expose you to chemicals, including nickel, which is known to the State of California to cause cancer and birth defects or other reproductive harm. For more information, go to www.P65Warnings.ca.gov

Item#	Description	Chore-Time®	AP®
HSDTC01	Drop Tube Control Switch	-	AP-0990

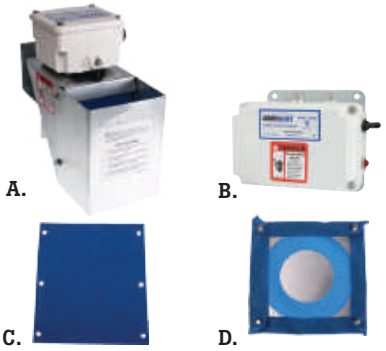

FEED LEVEL CONTROL SWITCH

Item#	Description
A) HS529	GrowerSelect Feed Level Control Switch
B) HS589CR	Control Unit Switch Replacement Kit
C) HS529-7	Replacement Diaphragm only
D) HS582	Replacement Diaphragm Assembly

⚠ WARNING:
This product can expose you to chemicals, including nickel, which is known to the State of California to cause cancer and birth defects or other reproductive harm. For more information, go to www.P65Warnings.ca.gov

SWITCH ASSEMBLY

Item#	Description	Chore-Time®	AP®
HS589	Switch Assy. w/o Relay	30953	-
HS689	Switch Assy. w/ Relay	-	FLX-4512
HS693-3P-108	Control Unit Assembly 230V 3PH GS With Relay M108		

⚠ WARNING:
This product can expose you to chemicals, including nickel, which is known to the State of California to cause cancer and birth defects or other reproductive harm. For more information, go to www.P65Warnings.ca.gov

CONTROL UNIT ASSEMBLY

Item#	Description	Chore-Time®	AP®
HS693	Complete w/ relay	-	FLX-4496
HS591KIT	Power head drop cone	-	FLX-2017
HS693-3P	Switch Assy. w/Relay, 3 Phase	-	FLX-4496-3
HS703-1	Control Unit Assembly M108	-	-

⚠ WARNING:
This product can expose you to chemicals, including nickel, which is known to the State of California to cause cancer and birth defects or other reproductive harm. For more information, go to www.P65Warnings.ca.gov

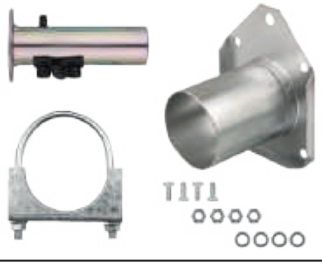

DIRECT DRIVER & TUBE ANCHOR

Item#	Description	Chore-Time®	AP®
HS536	Model 55	24102-8	FLX-2699
HS531	Model 75	24102-2	FLX-2696
HS531P	Model 75 /pellet	-	FLX-5210
HS537	Model 90	24102-3	FLX-2697
HS540	Model HR	-	FLX-2737
HS787	Direct driver & tube for M108	-	FLX-2737
HS628	Driver only M108	30313	-
HSL108	Driver only M108 w/ agitator slot for screener		-

⚠ WARNING:
This product can expose you to chemicals, including nickel, which is known to the State of California to cause cancer and birth defects or other reproductive harm. For more information, go to www.P65Warnings.ca.gov

TUBE CLAMPS

Item#	Description	Chore-Time®	AP®
CLAMP200	2" Tube Clamp	7084	-
CLAMP225	2-1/4" Tube Clamp	-	S-4490
CLAMP300	3" Tube Clamp	6515	-
CLAMP325	3-1/4" Tube Clamp	-	S-9186
CLAMP400	4" Tube Clamp	6721	S-4443
CLAMP450	4-1/2" Tube Clamp	34358	-
CLAMP550	5-1/2" Tube Clamp	-	S-4494

⚠ WARNING:
This product can expose you to chemicals, including nickel, which is known to the State of California to cause cancer and birth defects or other reproductive harm. For more information, go to www.P65Warnings.ca.gov

Chore-Time is the registered trademark of CTB INC., a company not affiliated with Hog Slat, Inc. Cumberland is a part of GSI, a worldwide brand of AGCO, a company not affiliated with Hog Slat, Inc. GrowerSELECT and Georgia Poultry Equipment Co. are trademarks owned by Hog Slat, Inc. Replacement parts listed with these marks are designed to fit and function in place of original equipment manufacturers replacement parts.

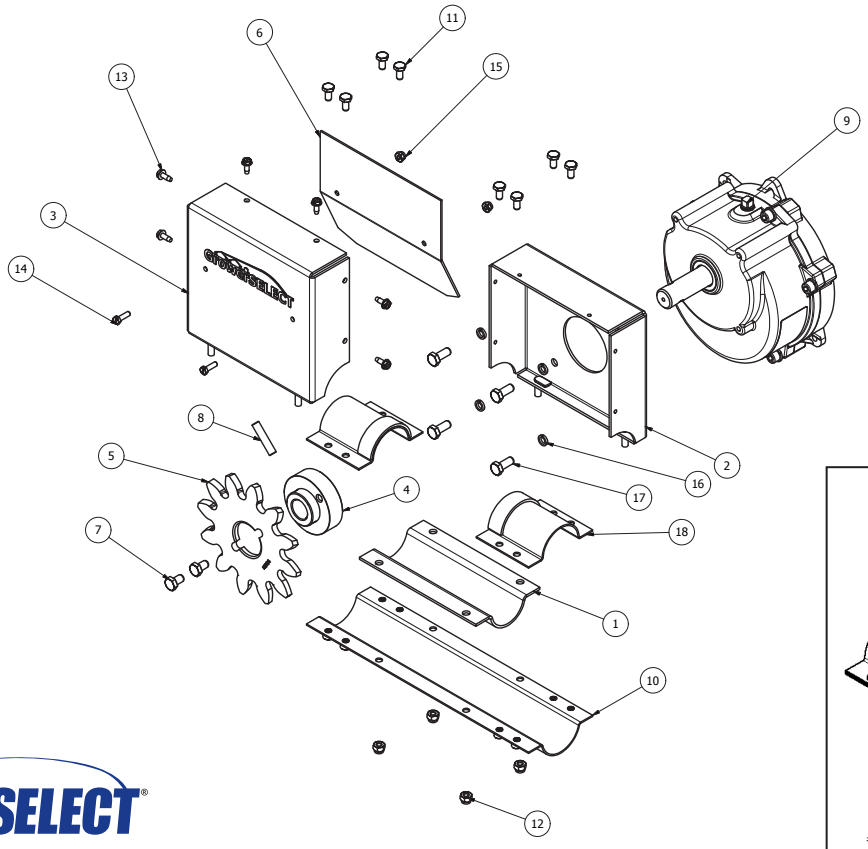

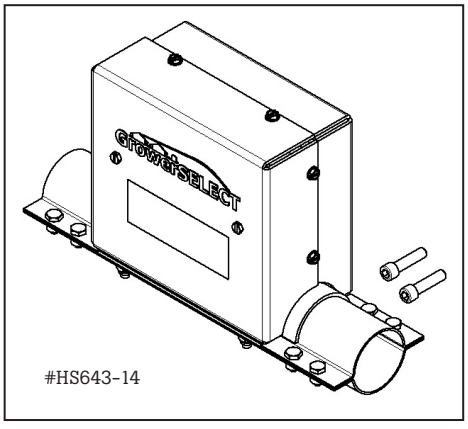

GrowerSELECT®

MULTIFLOW DRIVE UNIT

When installing GrowerSELECT Multiflo Drive Unit, must install 4 drive units per feed line. Use of Original Equipment Manufacturer part numbers is for reference only.

Item#	Description	Chore-Time®
HS643A	Drive Unit MF Drag Auger, with gearhead	–
HS643-14	Drive Unit MF Drag Auger, no gearhead	–
1) **HS643-3**	Wear Shoe-MF Drive	8210
2) **HS643-12**	Weldment, Base Drive Unit	8207
3) **HS643-13**	Weldment, Cover, Front Unit-MF Drive	8208
4) **HS643-9**	Hub, Drive Gear-MF Drive	8213
5) **HS643-5**	Sprocket, Drive	8463
6) **HS643-8**	Brace, Auger-MF Drive	24674
7) **23253**	Screw, Socket Hd Cap 5/16" 18 thread x 3/4"	6850-1
8) **HS643-10**	Pin, Dowel-MF Drive	8699

Item#	Description	Chore-Time®
9) **HSGR021**	Gear Head 62/52 RPM at 60/50 Hz-78	3261-9
10) **HS643-2**	Connector, Base-MF Drive	9636
11) **60500**	Bolt Hex Cap ¼-20 x ½ Zn	1487
12) **60680**	Nut, Lock Hex Nylon Insert ¼-20 Zn	1269
13) **80518**	Screw Self Drilling #10-16 x 5/8" Zinc	3037
14) **616512**	Screw, Slotted Hex Machine 10-24 x 5/8" Zinc	4416-3
15) **1137014**	Nut, Hex Nyloc 10-24 Zinc	1560
16) **60597**	Washer, Lock 5/16" Zinc	547
17) **60508**	Bolt Hex Cap 5/16" -18 x ¾" Gr. 5 Zinc	2046
18) **HS643-4**	Weldment, Connector End	8211

HUB

Item#	Description
HS643-9	for Multiflo Drag Auger

WEAR SHOE

Item#	Description
HS643-3	Wear Shoe - Multiflo Drive

DRIVE SPROCKET

Item#	Description
HS643-5	for Multiflo Drag Auger

PIN

Item#	Description
HS643-10	Pin, Dowel - Multiflo Drive

PINION

Item#	Description	Chore-Time®
HSP05	Pinion Straight 1/2"	C3249

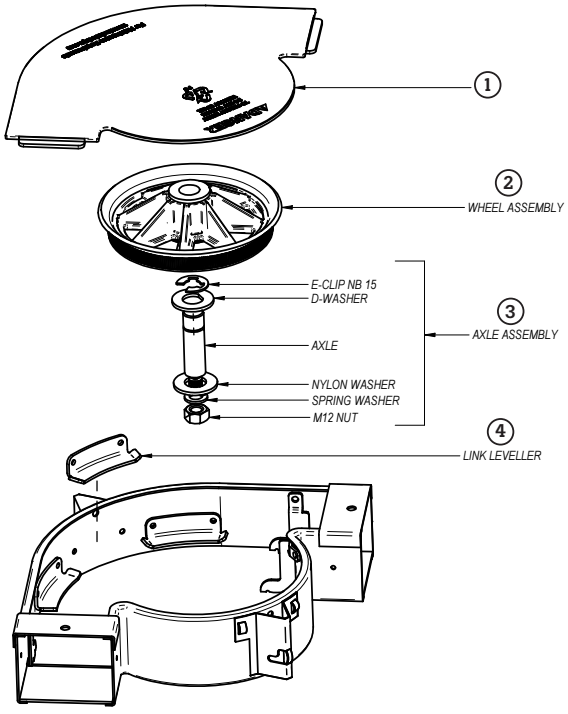

GrowerSELECT®

90° Corner

Replacement corner for chain systems complete with suspension kit and clear plastic cover. Features a cast iron wheel and roller bearing pivot pin for longer life.

#HSFC2C ..... GrowerSELECT® 90° Corner

⚠ WARNING:
*This product can expose you to chemicals, including nickel, which is known to the State of California to cause cancer and birth defects or other reproductive harm. For more information, go to www.P65Warnings.ca.gov

cancer and birth defects or other reproductive harm. For more information, go to www.P65Warnings.ca.gov

Wheel Assy

#HSFC2C-1R ..... Wheel Assy

Clear Cover

#HSFC2C-6R ..... Clear Cover

Shaft Assy

#HSFC2C-2R ..... Shaft Assy

Shaft Seal

#HSFC2C-4R ..... Shaft Seal

Ball Bearing

#HSFC2C-3R ..... Ball Bearing

GrowerSELECT®

Replacement Feed Chain

#HSFC-1 ..... 50′ rolls only

⚠ WARNING:
*This product can expose you to chemicals, including nickel, which is known to the State of California to cause cancer and birth defects or other reproductive harm. For more information, go to www.P65Warnings.ca.gov

Composite Wheel and Shaft Kit

#HSFC2-2 ..... Composite wheel and shaft kit for original 90° Corner

⚠ WARNING:
*This product can expose you to chemicals, including nickel, which is known to the State of California to cause cancer and birth defects or other reproductive harm. For more information, go to www.P65Warnings.ca.gov

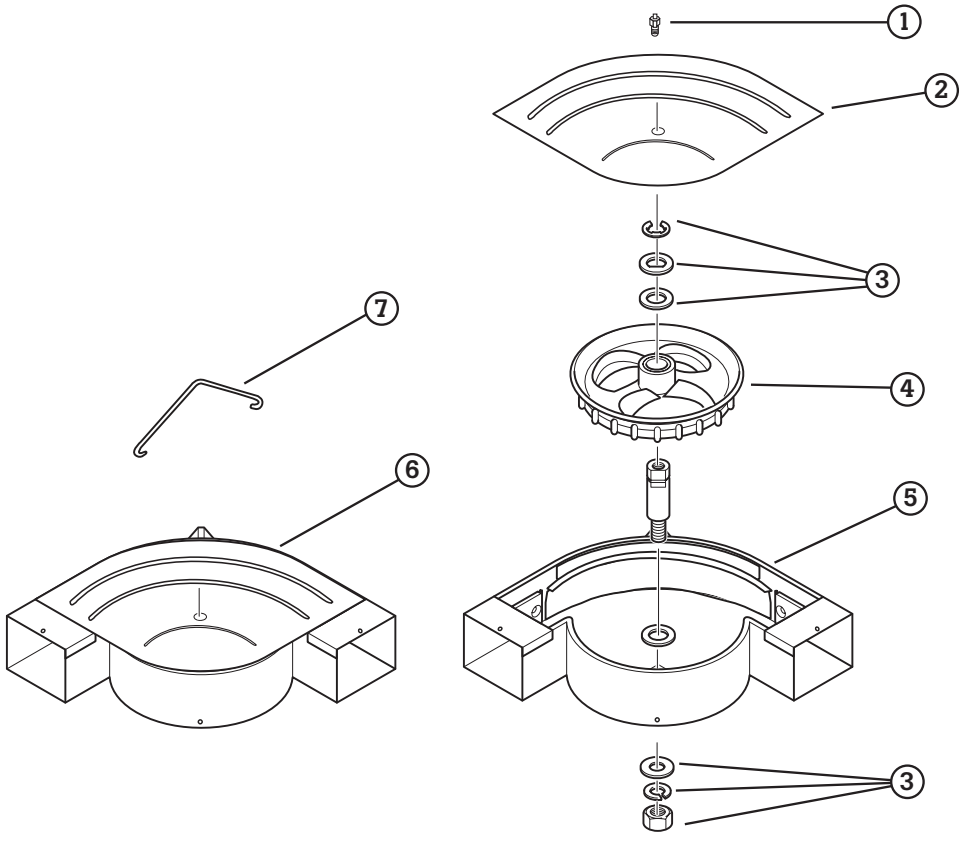

⚠WARNING:
This product can expose you to chemicals, including nickel, which is known to the State of California to cause cancer and birth defects or other reproductive harm. For more information, go to www.P65Warnings.ca.gov

CUMBERLAND 90° CORNER #G07097574C

Item#	Description
1) HS07099370	Bolt with grease zerk
2) G4546-P	Plastic Cover
3) G07098281	Pivot Pin Assembly
4) G07101494	Corner wheel with bushing

Item#	Description
5) G07097574B	Corner weldment
6) G07097574C	Complete 90° Corner
7) G07097697	Corner Suspension Hanger

90° CORNER

Item#	Description
G07097574C	90° Corner complete

⚠WARNING:
This product can expose you to chemicals, including nickel, which is known to the State of California to cause cancer and birth defects or other reproductive harm. For more information, go to www.P65Warnings.ca.gov

PIVOT PIN ASSEMBLY*

Item#	Description
G07098281	Pivot Pin Assembly
HS07099370	Grease Zerk Only

*works for both Big Dutchman and Cumberland corners

⚠WARNING:
This product can expose you to chemicals, including nickel, which is known to the State of California to cause cancer and birth defects or other reproductive harm. For more information, go to www.P65Warnings.ca.gov

POWER SHOES

Item#	Description
HSFC11-C	Cumberland Power Shoe Wear Plate Assembly

⚠WARNING:
This product can expose you to chemicals, including nickel, which is known to the State of California to cause cancer and birth defects or other reproductive harm. For more information, go to www.P65Warnings.ca.gov

TROUGH

Item#	Description
HS618-10	Medium wide, 10′ long
HS618-12	Medium wide, 12′ long

Item#	Description
HWF1938	Leg Stand for Chain Feeder Support 19.5″ Tall W/O Hardware
60580	Washer Flat Commercial 5/16 X 3/4 SS
97337304SS	Bolt U Round 5/16-18X1-7/16″X2.73″ 304SS
9731240503	Bolt U 5/16″ X 1 3/8″ ID X 2 1/2″
605071	Bolt Hex Cap 5/16-18 X 1/2″ Grade 5 Zinc
60681	Nut Lock Hex Nylon Insert 5/16-18 Zinc
617202	Pipe Tube 1.315″OD X 10′ 16Ga Galv w/Crimp-Perching Roost
6172024	Pipe Tube 1.315″OD X 24′ 12Ga Galv w/Crimp- Perching Roost

⚠WARNING: This product can expose you to chemicals, including nickel, which is known to the State of California to cause cancer and birth defects or other reproductive harm. For more information, go to www.P65Warnings.ca.gov

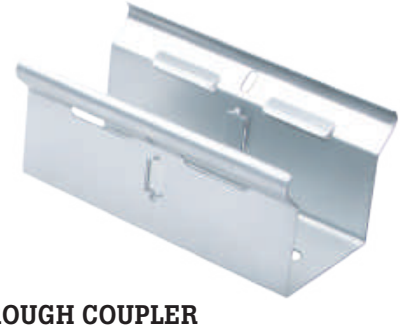

TROUGH COUPLER

Item#	Description
HS656	Medium wide, 8″
G07097570	Medium wide, 12″

⚠WARNING:
This product can expose you to chemicals, including nickel, which is known to the State of California to cause cancer and birth defects or other reproductive harm. For more information, go to www.P65Warnings.ca.gov

RINGER TOOL

Item#	Description
GLF9/16UTO	Ringer Tool for 9/16" Hog Rings
KHF515DG50PL	Hog Ring 9/16" Galvanized 2,500/Box

HOG RING TOOL

Item#	Description
GLFG7UTO	Tool for 616G50(SR8G) Hog Ring w/Black Handles Orange
GLF616G50	Ring 11/16" C 2,500 Rings/Box Use w/G7/P7 Pliers

D RING

Item#	Description
GLFG22	D Ring Tool Manual 3/4"
GLF15DG50	Ring 3/4' 'D' Style 15 Gauge Galvanized 10,000 p/bx

GALVANIZED WELDED WIRE

Item#	Description
80575	1 x 1, 6' x 100' Roll, 14 Gauge
805752	1 x 1, 2' x 100' Roll, 14 Gauge
805753	1 x 1, 3' x 100' Roll, 14 Gauge
805755	1 x 1, 5' x 100' Roll, 14 Gauge
8057551	1 x 1, 5' x 100' Roll, 16 Gauge
805756	1 x 1, 4' x 100' Roll, 14 Gauge
805852	1 x 2, 2' x 100' Roll, 14 Gauge
805853	1 x 2, 3' x 100' Roll, 14 Gauge
805854	1 x 2, 4' x 100' Roll, 14 Gauge
805855	1 x 2, 5' x 100' Roll, 14 Gauge
805856	1 x 2, 6' x 100' Roll, 14 Gauge

GEORGIA® POULTRY EQUIPMENT CO. EGG BELT

Pre-Stretched Polypropylene Belt resists moisture absorption to inhibit the growth of bacteria and fungus. Herringbone weave keeps eggs in place.

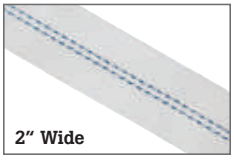
2" Wide

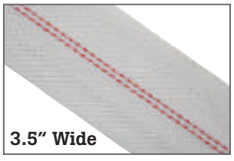
3.5" Wide

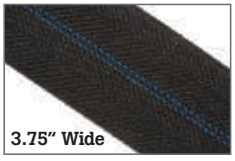
3.75" Wide

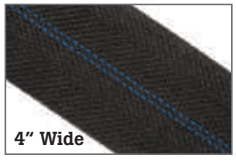
4" Wide

5" Wide

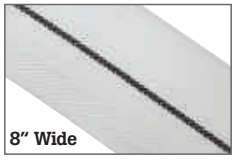
8" Wide

ITEM #	LENGTH	COLOR
2" WIDE		
HSEB800A-1270W	1270'	White/Blue Stripe
3.5" WIDE		
HSEB801A-1040W	1040'	White/Red Stripes
HSEB801A-1240W	1240'	White/Red Stripes
HSEB801A-1509W	1509'	White/Blue Stripes
3.75" WIDE		
HSEB802A-840	840'	Gray/Blue Stripes
HSEB802A-1040	1040'	Gray/Blue Stripes
HSEB802A-1240	1240'	Gray/Blue Stripes
HSEB802A-1240W	1240'	White/Blue Stripes
HSEB802A-1509W	1509'	White/Blue Stripes
HSEB802A-1600W	1600'	White/Blue Stripes
4" WIDE		
HSEB803A-840	840'	Dark Gray/Blue Stripes
HSEB803A-1040	1040'	Dark Gray/Blue Stripes
HSEB803A-1240	1240'	Dark Gray/Blue Stripes

ITEM #	LENGTH	COLOR
4.5" WIDE		
HSEB805A-1050W	1050'	White/Red Stripes
5" WIDE		
HSEB807-840	840'	Dark Gray/ Blue Stripes
HSEB807-1040	1040'	Dark Gray/ Blue Stripes
HSEB807-1240	1240'	Dark Gray/ Blue Stripes
145 MM WIDE		
HSEB809A-294MW	294m	White/Green Stripes
8" WIDE		
HSEB810A-820W	820'	Feather Glide White/Black Stripe
HSEB810A-1020W	1020'	Feather Glide White/Black Stripe
HSEB810A-1220W	1220'	Feather Glide White/Black Stripe

ASK ABOUT QUANTITY DISCOUNTS ON OUR EGG BELTING!

PLEASE SEE PG. 96 FOR BELT WELDER OPTIONS

HOLD DOWN CLIP

Item#	Description
HSH075	Hold Down Clip for Egg Belt

⚠ WARNING:
This product can expose you to chemicals, including nickel, which is known to the State of California to cause cancer and birth defects or other reproductive harm. For more information, go to www.P65Warnings.ca.gov

#66501

#66500

#66600

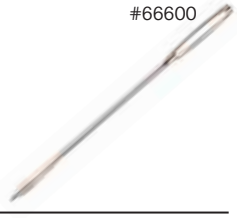

HAND SEWING ACCESSORIES

Item#	Description
66501	Waxed Thread, 27 Yard Spool
66500	Thread, 1 lb. Spool
66600	Needle bent sack

#64039

#TAPE45MMX50M

#64037-1040

MYLAR EGG BELTING

Item#	Description
64035-1040	Belting Creased 3-7/8" x 1040'
64037-1040	Belting 3-7/8" x 1040'
64039	Heavy Duty Punch for Mylar Egg Belt
TAPE45MMX50M	45mm X 50M Single Sided Strong Self Adhesive

#66500

#AMT66502

#AMT66610

#AMT66010

MACHINE SEWING ACCESSORIES

Item#	Description
66500	Thread, 1 lb. spool
AMT66502	Thread, 1/2 lb. cone
CSO413N-5	Needle Short Straight 1-7/8" D-5 12/Pkg
CSO508-3	Needle Curved Hand Sewing Egg Belt 12/Pkg Sold Per Box

#LM10339 Vector Drive Motor with Encoder

- Class H inverter rated insulation system
- Constant torque operation from 0 to base RPM rating with vector drives
- C Face with rigid base through 100 HP on LEESON models, Lincoln models through 5 HP
- TEBC designs utilize 3-phase blower motors
- Normally closed thermostats
- Cast iron, Steel and Aluminum frame construction
- Provisions for Encoder feedback devices
- Precision balanced rotors
- UL recognized and CSA certified
- 3-year warranty

#BM1005 Baldor-Reliance General Purpose Motor

- Pressure cast aluminum end plates with ribbed design for rigidity
- Ball bearings
- Locked drive end bearing
- Heavy gauge steel frame

Application(s)

- Pumps, fans, conveyors, machine tools, gear reducers.

Item#	HP	RPM	Frame	Voltage	F.L. Amps	Shaft Size	Phase	Wt.	Use
LM10339	3/4	1800	56C	208-230/460	2.4	5/8"	3	24	Replaces Chore-Time® egg belt/collection motor (3 Phase Inverter Duty)
BM1005	1/2	1800/1740	56C	230/460	2.4	5/8"	3	24	Replaces CT egg belt/collection motor

STRING ASSEMBLY

Item#	Description	Chore-Time®
HSL103	String Assembly for Egg Counter	14581

RETURN ASSEMBLY

Item#	Description	Chore-Time®
HSL102	Return Assembly Rear Egg Collector	20217

W PIECE

Item#	Description	Chore-Time®
HSL109	W Piece for Egg Collector	21051

IDLER ASSEMBLY

Item#	Description	Chore-Time®
HSL124	Idler Assembly Egg Belt Tension	36204

GUARD EDGE

Item #	Description
HSL111	Guard Edge-Large 1.5mm Layer
HSL110	Guard Edge 1.5mm Layer

GUIDE

Item#	Description	Chore-Time®
HSL14156	Guide w/ Clip for Lower Egg Belt	14156
HSL14819	Guide Lower Egg Belt for Collectors	14189

TROUGH RETAINER CLIP

Item#	Description	Chore-Time®
HS14431	Trough Retainer Clip	14431

COLLAR ZINC-COATED STEEL

Item#	Description	Chore-Time®
HS-4307	5/8" w/ set screw	1386

Use of Original Equipment Manufacturer part numbers is for reference only

⚠ WARNING:
This product can expose you to chemicals, including nickel, which is known to the State of California to cause cancer and birth defects or other reproductive harm. For more information, go to www.P65Warnings.ca.gov

SPROCKETS

Item #	Description	Teeth	Bore	Use	Chore-time®
40BS14H-1	Sprocket #40 Chain	14	1" Keyway 2 set screws	Chore-Time Ultra Egg Collectors	20390
VZ1BF40-028-1	Sprocket #40 Chain	28	1" Keyway 2 set screws	Chore-Time Ultra Egg Collectors	20201
VZ1BF40-070-1	Sprocket #40 Chain	70	1" Keyway 2 set screws	Chore-Time Ultra Egg Collectors	14668
VZSP321508-01	Sprocket #25 Chain	45	1" Keyway 2 set screws	Chore-Time Egg Belt Drive	-
VZSP321508-02	Sprocket #25 Chain	23	5/8" Keyway 2 set screws	Chore-Time Egg Belt Drive	-
MI40B54	Sprocket #40 Chain	54	1" Keyway x 3/16"	-	-
MI40B40	Sprocket #40 Chain	40	1" Keyway x 3/16"	-	-
MI40BS42	Sprocket	42	1" Keyway x 6.97"	-	27970-42

800 SERIES CAST-IRON RIGHT ANGLE GEAR REDUCER

Output Shaft Configuration: LEFT
Frame Size: 56C
Ration: 1:60

Input RPM	1750
Output RPM	29.2
Input HP	0.674
Output HP	0.435

Item#	Description	Chore-Time®
GRG8210118-00	60:1 Chore-Time Egg Collector	20235

⚠ WARNING:
This product can expose you to chemicals, including nickel, which is known to the State of California to cause cancer and birth defects or other reproductive harm. For more information, go to www.P65Warnings.ca.gov

MANURE CURTAIN

Item#	Description	Chore-Time®
B50548	23" x 600' Roll, 8' Perforated Sections	15525
B50550	26" x 600' Roll 8' Perforated Sections	-
B50552	28" x 600' Roll 8' Perforated Sections	-
HSL502	Plastic Clip for Manure Curtain 96"	E1810-96

WIRE BELT RETURN

Item#	Description	Chore-Time®
HSL112	Zinc Plated	29455

⚠ WARNING:
This product can expose you to chemicals, including nickel, which is known to the State of California to cause cancer and birth defects or other reproductive harm. For more information, go to www.P65Warnings.ca.gov

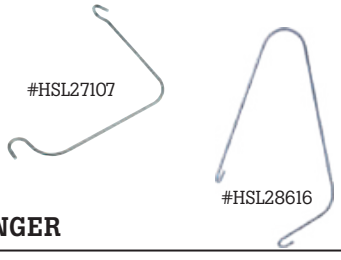

HANGER

Item#	Description	Chore-Time®
HSL27107	Wire Form Zinc - Pullet	27107
HSL28616	Wrap Around Dura Cage	28616

⚠ WARNING:
This product can expose you to chemicals, including nickel, which is known to the State of California to cause cancer and birth defects or other reproductive harm. For more information, go to www.P65Warnings.ca.gov

CHAIN BREAKER

Item#	Description
HSFC8	Cast Chain Breaker

⚠ WARNING:
This product can expose you to chemicals, including nickel, which is known to the State of California to cause cancer and birth defects or other reproductive harm. For more information, go to www.P65Warnings.ca.gov

Use of Original Equipment Manufacturer part numbers is for reference only

EGG BELT ESCALATOR

Item#	Description	Chore-Time®
HS805-01	Finger Short Replacement	21358
HS805-02	Finger Long Replacement	21359
HS805-50	Egg Belt Escalator 2.5" x 50' 3mm thick	21057

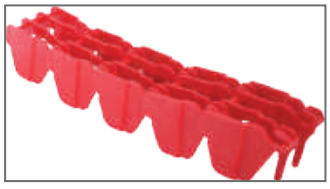

LINK BELT BASKET

Item #	Description
C29286	Red Link Belt Basket for Ultra-Lift

POWERTWIST DRIVE V-BELT

3L section POWERTWIST Drive V-Belts combine industry standard horsepower ratings, superior performance in challenging operating environments with fast, easy installation and are a permanent replacement upgrade from traditional rubber V-belts

Item #	Description
FD0405010-25	3L Section for Collectors, 25' box
FD408010-100	3L Section for Collectors, 100' box

SNAP ACTION SWITCH FOR EGG COUNTER

Item#	Description	Chore-Time®
6X291	10 Amp, 1/2 HP, 125/250VAC	13706

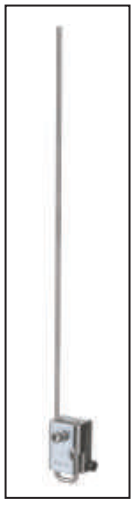

LIMIT SWITCH LEVER ARM

Limit Switch Lever Arm, Actuator Type: Rod, 10.00" Arm Length, 0.12" Roller Dia.

Item #	Description
9007FA1	Limit Switch Lever Arm

SQUARE D LIMIT SWITCH

The Square D is a full body heavy duty 1 pole limit switch with a plug-in body and rotary type head. It has a long lifespan with an electrical durability of 1,000,000 cycles and mechanical durability of 10,000,000 cycles. Rated at 4 and 13 NEMA ratings and constructing of zinc on both the head and body. *Limit switch used in scraper applications.

- Actuator Type: Side Rotary, No Lever
- Body Style: Standard
- Contact Form: SPDT-DB
- Current Rating: 10 A
- Head Type: Rotary
- Contact Operation: Snap Action
- Number of Poles: 1
- Contact Form-Switches: 1NC-1NO
- Voltage Rating: 600 VAC

Item #	Description
9007C5	Square D Limit Switch

Use of Original Equipment Manufacturer part numbers is for reference only

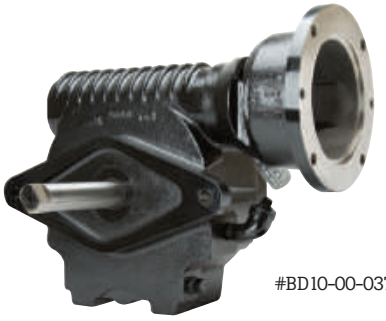

#BD10-00-0376

#L10-00-0454-P

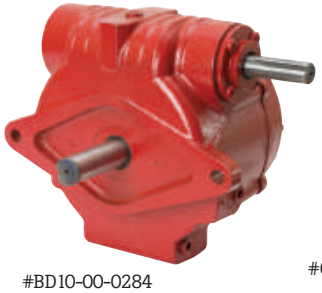

#BD10-00-0284

#G07097737

GEAR BOX

Item #	Description
BD10-00-0376	Reducer 52:1 Chain Feeder Drive Gearbox input 2 hp
BD10-00-0284	RH Reducer Ldy 52:1 Hd Rhbs Gear Box chainfeeder input hp 1-1/2
L10-00-0454-P	LH Reducer Gear Head P w/ Left Hand Motor Mount 52:1
G07097737	Cumberland® chain feeder gear reducer, 52:1 ratio 60FPM 10-00-0284 RH

⚠ WARNING:
This product can expose you to chemicals, including nickel, which is known to the State of California to cause cancer and birth defects or other reproductive harm. For more information, go to www.P65Warnings.ca.gov

#VZSP316429-01

METRIC SPROCKETS

Item #	Description
VZSP316429-01	Sprocket Dbl DS40A 19 x 20 mm Bore Keyway 1 Set Screw
VZSP316429-02	Sprocket 50B 38 x 20 mm Bore Keyway 2 Set Screws
VZSP-326881	Sprocket 50B 33 x 20 mm Bore Keyway 2 Set Screws
PP17514	Drive Sprocket for Big Dutchman Chain Feeder
VZ12BSPRK	12B Chain, 42 Tooth x 25 mm Bore
VZ12BSPRK-36	12B Chain, 36 Tooth x 25 mm Bore
VZ08BSPRK	08B Chain, 42 Tooth x 20 mm Bore

⚠ WARNING:
This product can expose you to chemicals, including nickel, which is known to the State of California to cause cancer and birth defects or other reproductive harm. For more information, go to www.P65Warnings.ca.gov

#V41HOLLOW

#VC41HPCL-SPEC

#HS600

MELLER END COLLECTORS

Item #	Description
HS600	Meller end cup, yellow
V41HOLLOW	41 hollow pin roller chain
V41HOLLOW-31	Chain 41 Hollow Pin Roller – 30.9166' Length
V41HOLLOW-32	Chain 41 Hollow Pin Roller - 32.167' Length
VC41HPCL-SPEC	Connecting link for 41 hollow point chain

⚠ WARNING:
This product can expose you to chemicals, including nickel, which is known to the State of California to cause cancer and birth defects or other reproductive harm. For more information, go to www.P65Warnings.ca.gov

LIMIT DEVICE FOR RIDDER MOTORS

Replacement limit switch device suitable for most Ridder type motor gearboxes (usually green colour) nest floor motors. Used on all recent Vencomatic nests and early Potters Avinest nests. Also suitable for Ridder winch motors use in ventilation and auto-popholes.

Item #	Description
PP18-040	For Venco Ridder

⚠WARNING:
This product can expose you to chemicals, including nickel, which is known to the State of California to cause cancer and birth defects or other reproductive harm. For more information, go to www.P65Warnings.ca.gov

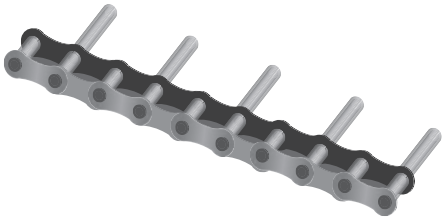

CHAIN ROLLER

Item #	Description
VIK08B-1EP	08B-1 W/Extended Pin Every 3rd Pitch Farmer Auto

⚠WARNING:
This product can expose you to chemicals, including nickel, which is known to the State of California to cause cancer and birth defects or other reproductive harm. For more information, go to www.P65Warnings.ca.gov

GUIDE EGG BELT

Item #	Description
PP11-150-631500	Guide Egg Belt

COUNTER WEIGHTS

Item #	Description
PP21-310	Counter Weight for Egg Belt 20"
PP21-005	Counter Weight for Egg Belt 10"

DRIVE ROLLER FOR EGG BELT ASSEMBLY

Item #	Description
DP913023	146mm

FINGER EGG PEG

Item #	Description
DR00001	2" for Big Dutchman Escalator
DREP388	Belt with pegs installed, Sold per ft

NYLON GEAR

Item#	Description
DP13031	Z-13 Deescalator #13031

Item#	Description
BD99-50-9518	Bearing on Drive Sprocket on Big Dutchman Feed Chain
BD45-00-0088	Bearing Flange Cast Iron 2 Hole 25mm SBFW205-D1

Wide inner-ring set screw locking ball bearing. Bearings are double sealed, self-aligning by up to three degrees, and re-greasable for easy maintenance

Item#	Description
UCFL20516EG5	2 Bolt Flange Bearing, 1" Bore, Set screw

Wide inner-ring set screw locking ball bearing. These zinc chromate plated bearing inserts are factory filled with food grade grease and they are coupled with a white thermoplastic housing for an exceptional degree of corrosion resistance. Bearings are double sealed, self-aligning by up to three degrees, and re-greasable for easy maintenance.

Item#	Description
UCFL20824ES7NP	2 Bolt Flange Bearing, 1.5" Bore, Set screw'

Wide inner-ring set screw locking ball bearing. Bearings are double sealed, self-aligning by up to three degrees, and re-greasable for easy maintenance.

Item#	Description
UCF20516EG5	4 Bolt Flange Bearing, 1" Bore, Set Screw

Wide inner-ring eccentric locking collar bearings grip the shaft firmly and they are ideal for industrial and agricultural applications where high torque and heavy loads can cause problems with other locking styles. Double sealed and re-greasable for reliable operation.

Item#	Description
NANF20927	4 Bolt Flange Bearing, 1-11/16" Bore, Eccentric Collar

Narrow inner-ring eccentric locking collar bearings are double sealed and re-greasable.

Item#	Description
SA20412FP9	Ball Bearing Insert, 3/4" Bore, Eccentric Collar

Wide inner-ring set screw locking ball bearing. These 440 grade stainless bearing inserts are factory filled with food grade grease and they are coupled with a 316 stainless steel housing for an exceptional degree of corrosion resistance. Bearings are double sealed, self-aligning by up to three degrees, and re-greasable for easy maintenance.

Item#	Description
UCS6H1	2 Bolt Flange Bearing, 1/2" Bore, Set Screw

Item#	Description
LFSC100	3 Bolt Flange Bearing, 1" Bore

Concentric locking collar bearings utilize a special shaft locking mechanism that provides for 360 degrees of shaft contact and a high degree of ballpath roundness. This translates to low vibration and quiet operation. They are ideal for air handling applications and other areas with high speed operation. Re-greasable.

Item#	Description
NCP21239	Pillow Block Mounted Ball Bearing, 2-7/16" Bore, Concentric Collar

Narrow inner-ring set screw locking bearings are factory lubricated and double sealed for maintenance-free operation.

Item#	Description
SB2018KG5	Ball Bearing Insert, 1/2" Bore, Set Screw

Item#	Description
SBFTD202-10G	5/8" Set Screw Insert Bearing with 2 Bolt Ductile Flange
SBFTD204-12G	3/4" Set Screw Insert Bearing with 2 Bolt Ductile Flange

Item#	Description
3021DCTNTG18	.5000" Bore x 1-3/8" OD x 7/16" W Single Row Two Seal Enclosed Semi Ground Radial Ball Bearing

40MM 2-Bolt Flange Eccentric Locking Collar Bore Dia. 40mm Wide Inner Race Insert

Item#	Description
NANFL208	40MM 2-Bolt Flange Bearing

FYH 2 BOLT FLANGE UNIT UFL005

Item#	Description
SBPFL205KG5	25MM Bore Dia., Set Screw

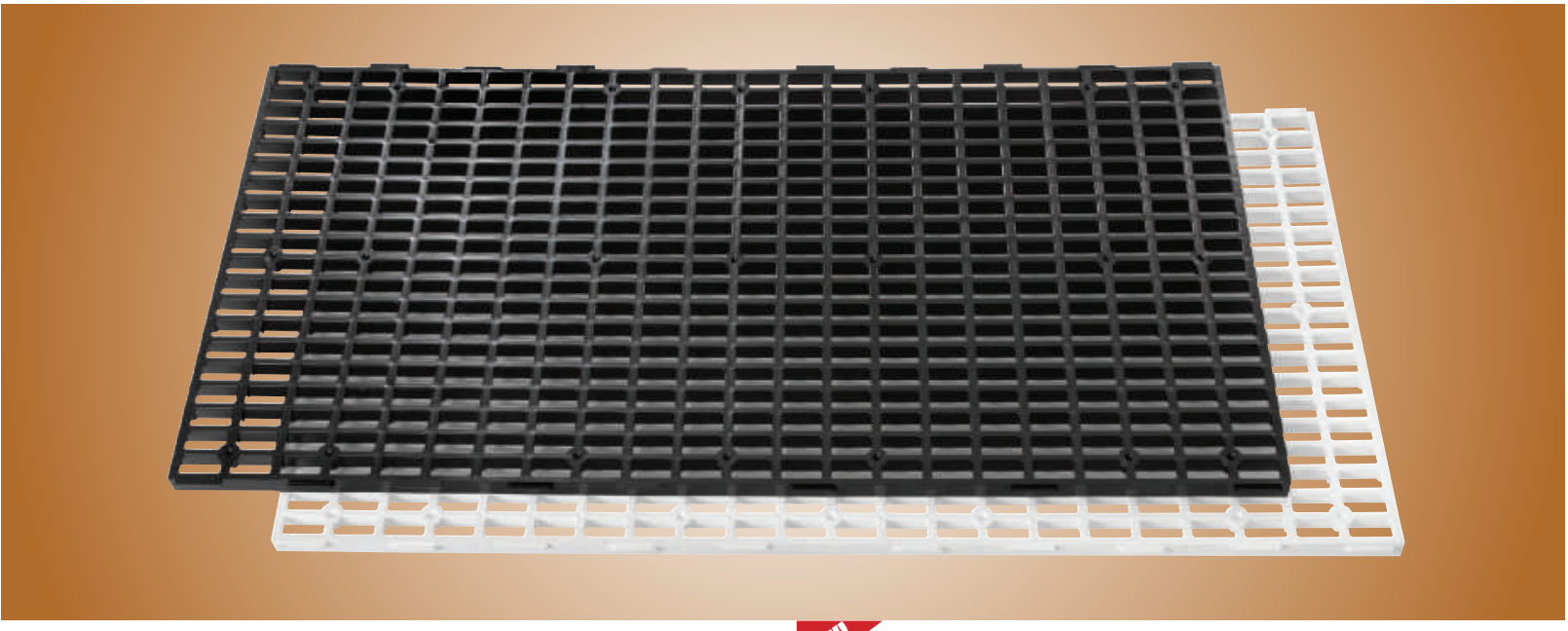

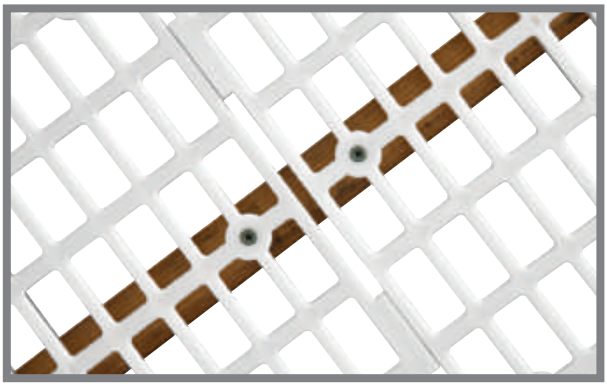

NEW!

HEN SLAT

17% to 28% more open area

Rectangle slots create 58.5% of total opening to reduce manure buildup resulting in a cleaner floor.

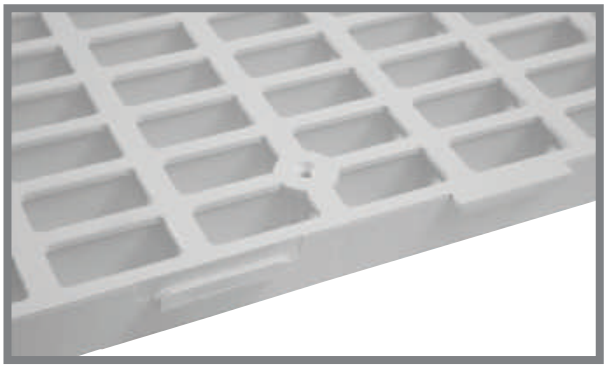

Stronger, Heavier Panels

Each 2′ x 4′ panel weighs 6.7 pounds...over 3/4 of a pound more than competitive brands. 21 longitudinal ribs compared to others with only 17 ribs provides a level slat surface with only three support runners.

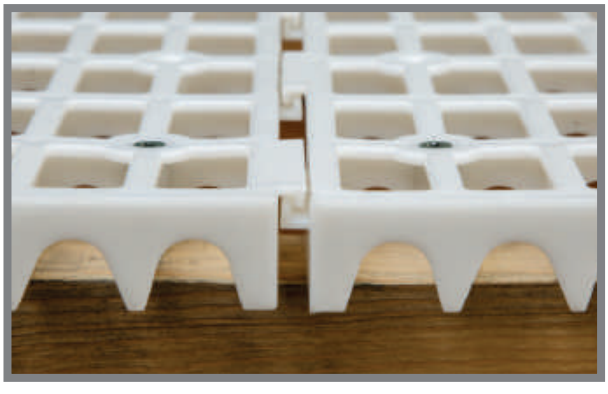

Interlocking tabs

Multiple interlocking edge tabs reduce flexing to promote a flat, stable walking surface. Arch latitudinal ribs furnish greater support to the longitudinal ribs.

Choose from three different UV stable Polypropylene formulations in 24-inch wide by 48-inch long sections.

#PF-P24X48 ..... Prime white "virgin" poly
#PF-P24X48RP ..... Reprocessed white poly
#PF-P24X48RPB ..... Reprocessed black poly

GrowerSELECT

Nest Systems

Maximize breeder flock production with a comfortable, secure nesting system from GrowerSELECT. Choose from center or side belt models with 8 or 10 holes per side (16 or 20 total). Heavy galvanized metal construction.

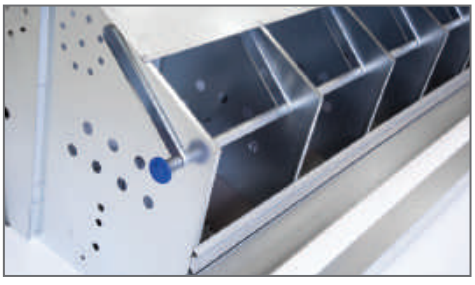

Choose from manual nest closure or integrated tube closure for automated systems.

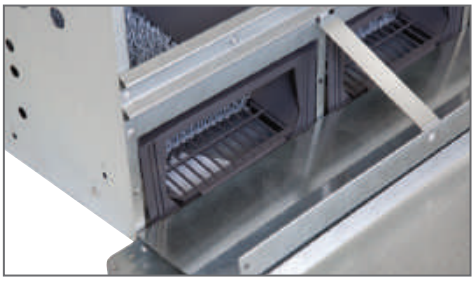

Open grill polypropylene nest bottom permits trash to fall through and improves air circulation. Choose from turf style or rubber finger pads.

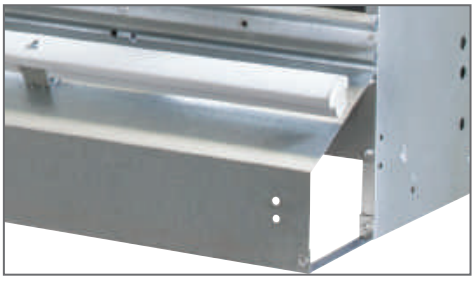

Includes poly Comfort Perch ergonomically designed to increase bird comfort. Mushroom shape fits bird paw promoting better balance.

Two nest width sizes of 9.5 and 12 inches are available. Open top design allows hens easy access to the nests.

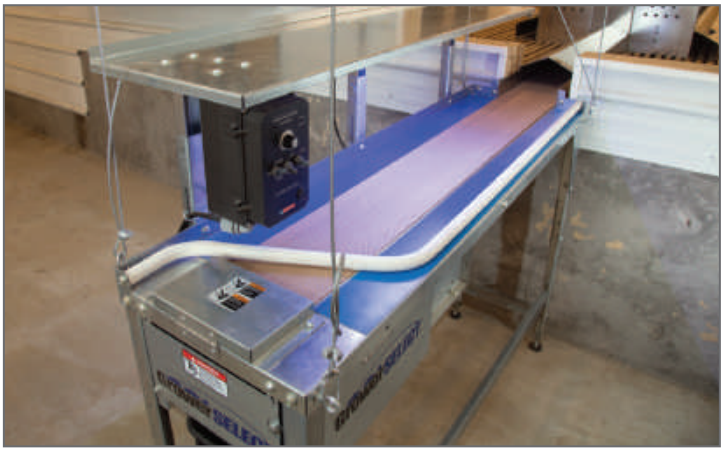

GrowerSELECT

Collection Tables

Simplify egg gathering with GrowerSELECT collection tables. Innovative pinch roller design maintains belt tension to reduce slippage. Top shelf adjusts height without tools. Preprogrammed controller features "soft start/stop" to reduce egg damage while PVC guide rail safety directs eggs to the collection point.

- Available in Center-belt and side-belt models
- Table height is adjustable from 27" to 42"
- Magnetic vinyl coated table tops are easily removed for cleaning.
- Self-regulating tensioning device permits greater range of adjustment.
- Pre-wired NEMA4X controller requires no programming with "Soft start and stop"
- Belt speed of 17 to 27 fpm.
- Large collection trays under table collect dirt and debris.

BARNTALK™

Wireless barn alarm for swine and poultry producers

*** Ships direct from vendor**

BarnTalk 4G Gateway

The Gateway is the brains of the BarnTalk platform.

The BarnTalk 4G Gateway includes:
- (1) Cellular Gateway Unit
- (2) LTE/LoRA Antennas

#BTGW0100 ..... Standard 110V

Wireless Water Meters

Monitor water use from main water supply or individual rooms.

#BTWM2000 ..... 3/4", 20 GPM
#BTWM2500 ..... 1", 30 GPM
#BTWM3200 ..... 1-1/4", 50 GPM
#BTWM4000 ..... 1-1/2", 80 GPM

Wireless Temp Sensor - Outdoor

Add-on/replacement outdoor temperature sensor.

#BTTS0200 ..... Outdoor temp sensor

Wireless Temp Sensor - Indoor

Add-on/replacement outdoor temperature sensor.

#BTTS0100 ..... Indoor temp sensor

Wireless Humidity Sensor - Indoor

Add-on/replacement relative humidity sensor

#BTTS0300 ..... Indoor humidity sensor

Wireless Dry Contact Sensor

Sensor can remotely monitor relays and power outlets. Each Remote Dry Contact contains (2) terminals for Dry Contact (N/O) or (N/C). Alarms and notifications are completely customizable in the BarnTalk app.

#BTTS1000 ..... Dry Contact Sensor

LTE/LORA Antenna

Add-on or replacement LTE/LoRA antenna

#BTHW0200 ..... Antenna

Adjustable Sensor Hanger

Adjustable sensor hanger with carabiner for use with remote sensors.

#BTHW0700 ..... Hanger

Replacement Battery for Sensors

#BTHW0400 ..... Sensor Battery

Replacement Battery for Gateway

#BTHW0500 ..... Gateway Battery

Antenna Mounting Bracket

Pre-drilled right angle bracket for mounting the BarnTalk wireless antennas.

#BTHW0800 ..... Antenna Bracket

Infinity fans utilize advanced motor technology to lower energy costs, improve speed control, and reduce maintenance.

#AS-36EDDLPA-ID ..... 36" Infinity fan, plastic shutter, no cone
#AS-36206 ..... 36" poly cone
#AS-54XEDDLP-ID ..... 54" Infinity Fan, plastic shutter, no cone
#AS-54206 ..... 54" poly cone

⚠ WARNING:
This product can expose you to chemicals, including nickel, which is known to the State of California to cause cancer and birth defects or other reproductive harm. For more information, go to www.P65Warnings.ca.gov

Hog Slat's Infinity fan line incorporates advanced motor technology. Brushless DC motors utilize integrated electronics to convert AC power to DC, calculate the house controller signal, and control fan speed by regulating the power to the motor. Infinity fans have several significant advantages.

1) **Precise variable speed output.** Upon receiving a signal from the house controller, the motor microprocessor determines the correct speed for the desired ventilation rate. It continues to monitor the shaft RPMs and adjust the power inputs to maintain the right speed. Minimum ventilation rates are meet without using smaller, less efficient fans
2) **Reduced maintenance.** The direct-drive motor eliminates shaft bearings, pulley, and belts: no more costly and time-consuming repairs and adjustments.
3) **Lower energy costs.** At full load, the Infinity motor is more efficient than conventional AC motors. The Infinity motor maintains its high efficiency even with lower fan speeds.

PERFORMANCE DATA

		.05" SP*		.10" SP*		.15" SP*	
Infinity 36"	**RPM**	**CFM**	**CFM/WATT**	**CFM**	**CFM/WATT**	**CFM**	**CFM/WATT**
HighPerformance	1100	15100	14.8	14700	13.9	14200	13.0
High Volume	950	13000	19.4	12300	17.8	11800	16.2
High Efficiency	800	10600	28.1	9700	24.2	8600	20.2

*Performance data from Hog Slat's Test Chamber

PERFORMANCE CURVE:
.05" Static Pressure

RPM	1106	900	780	650	515
CFM	15200	12300	10400	8200	5700

		.05" SP		.10" SP		.15" SP		Bess
Infinity 54"	**RPM**	**CFM**	**CFM/WATT**	**CFM**	**CFM/WATT**	**CFM**	**CFM/WATT**	**Labs #**
High Performance	685	34,700	17.0	33,200	15.6	31,900	14.6	18212
High Volume	609	30,700	21.2	29,100	19.2	27,500	17.6	18211
High Efficiency	514	25,500	27.9	23,200	23.9	20,200	20.1	18210

PERFORMANCE CURVE:
.05" Static Pressure

RPM	672	602	503	401	304
CFM	33,800	30,100	25,000	17,300	8,800

51" & 54" X-Brace Ventilation Fan

⚠ WARNING:
This product can expose you to chemicals, including nickel, which is known to the State of California to cause cancer and birth defects or other reproductive harm. For more information, go to www.P65Warnings.ca.gov

- Rugged Fiberglass Housing
- Stainless Steel Fan Blade
- PVC Interior Shutters
- Heavy-Duty Poly Cone
- High Service Factor Motors

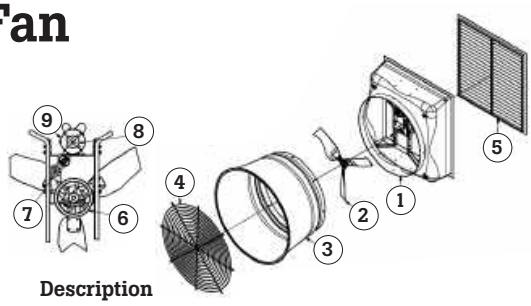

AS-54XEBDLP Parts List

Item #	Description
1) **AS-54101**	Housing, 54" Fiberglass
2) **HS900-54FA**	Prop 54" 3-Blade SS
3) **AS-54206**	Cone, Poly
4) **HS902-3**	Wire Guard
5) **HS901-6B**	Shutter PVC 57" x 59"
6) **PAK1041**	Pulley AK104-1
7) **HS903-3**	Tensioner Rotary Assembly with Splash Guards
8) **PAK3458**	Motor Pulley AK34-5/8
9) **HS9014C**	Motor 1.5 HP 1725 RPM 115/2301 PH
HS9314-VFD	Motor 1.5 Hp, 1725 RPM 230/460 3 PH
N/S) **HS903-7A**	Belt, Power Twist Gray

AirStorm X-Brace 54" Fan

Model	Description	Shutter	Rough Opening	RPM	Drive	Speed	HP
AS-54XEBDLP	54", w/o cone	PVC	58" x 60.5"	1725	Belt	Single	1-1/2
AS-54XEBDLP-V	54" w/VFD, w/o cone	PVC	58" x 60.5"	1725	Belt	Variable	1-1/2 (3 Ph)
AS-54XEBDLP-HE	High Efficiency Conversion Kit						
AS-54206	54" Poly Cone						

*Performance shown with no cone

Model	Bess Test	0.00" SP CFM	0.00" SP CFM/WATT	0.05" SP CFM	0.05" SP CFM/WATT	.10" SP CFM	.10" SP CFM/WATT	.15" SP CFM	.15" SP CFM/WATT
AS-54XEBDLP	17263	30,900	20.8	29,400	19.1	27,600	17.4	25,600	15.7
AS-54XEBDLP-HE	17265	28,500	23.2	26,700	20.9	24,400	18.6	21,700	16.1
AS-54XEBDLP	17264*	28,100	18.0	26,400	16.5	24,600	15.0	22,700	13.6

⚠ WARNING:
This product can expose you to chemicals, including nickel, which is known to the State of California to cause cancer and birth defects or other reproductive harm. For more information, go to www.P65Warnings.ca.gov

- Rugged Fiberglass Housing
- Stainless Steel Fan Blade
- PVC Interior Shutters
- Heavy-Duty Poly Cone
- High Service Factor Motors

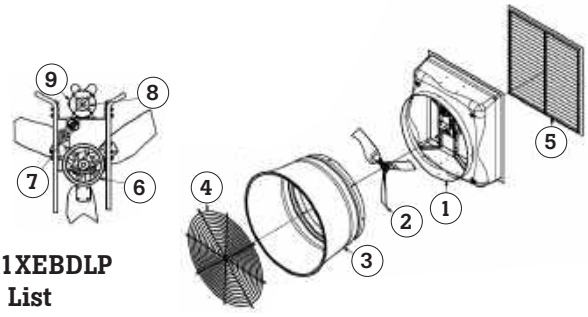

AS-51XEBDLP Parts List

Item #	Description
1) **AS-51101**	Housing, 51" Fiberglass
2) **HS900-51FA**	Prop, 51", 3-blade SS
3) **AS-51206**	51" Poly Cone
4) **AS902-51**	Wire Guard
5) **101209-1-8**	Shutter PVC, 53-7/8" x 53-7/8"
6) **PAK1041**	Pulley AK104-1
7) **HS903-3**	Rotary Tensioner Assy
8) **PAK3458**	Motor Pulley AK34-5/8
9) **HS9014C**	Motor 1.5 Hp, 1725 RPM, 115/230, 1 PH
HS9314-VFD	Motor 1.5 Hp, 1725 RPM 230/460 3 PH
N/S) **HS903-7A**	Belt, Power Twist Gray

AirStorm X-Brace 51" Fan

Model	Description	Shutter	Rough Opening	RPM	Drive	Speed	HP
AS-51XEBDLP	51" w/o cone	PVC	55" X 55"	115/230	Belt	Single	1-1/2
AS-51XEBDLP-V	51 w/o cone w/VFD	PVC	55" X 55"	230/460	Belt	Variable	1-1/2
AS-54206	51" Poly Cone						

Model	Bess Test	0.00" SP CFM	0.00" SP CFM/WATT	0.05" SP CFM	0.05" SP CFM/WATT	.10" SP CFM	.10" SP CFM/WATT	.15" SP CFM	.15" SP CFM/WATT
AS-51XEBDLP	18216	27,400	17.6	26,100	16.5	24,600	15.1	22,900	13.7

57" X-Brace Ventilation Fan

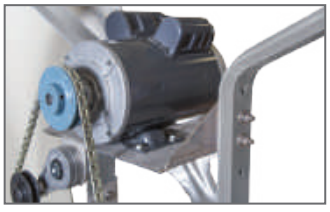

Efficient Drive System

Powerful High Service Factor 1.5 HP motor. Self-adjusting tensioner automatically keeps the 1/2" link belt at the proper tightness for maximum efficiency.

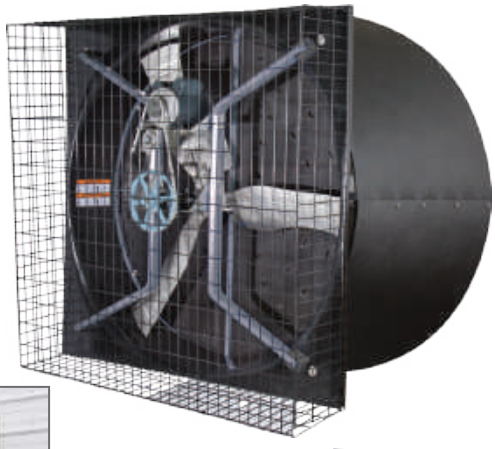

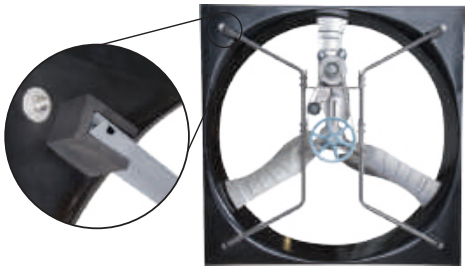

Rigid X-Brace Supports

Innovative X-Brace design moves the anchor points of the support arms to the housing corners for maximum stability. The support arms are manufactured from aluminum tube for increased corrosion protection and incorporate a triangular edge profile to reduce wind turbulence. Rubber corner mounts cushion the fiberglass housing from fan vibrations.

Optional Mounting Kit (#AS-57FMH)

Stainless steel kit adapts fan to a through-wall installation.

Poly Butterfly Shutter

Corrosion resistant poly dampers seal tight with magnetic closures and dual springs. An aluminum damper ring maintains maximum stability in any temperature extreme.

THE BEST PILLOW BLOCK EVER

FloBack Seal

Improved Bearing Life

New solid base bearing housing increases mounting stabillity, reducing vibration significantly. The new bearing also includes a double-lip FloBack seal to improve lubrication and add additional protection against contamination to reduce maintenance. Fan features Stainless Steel motor and bearing mounting plates.

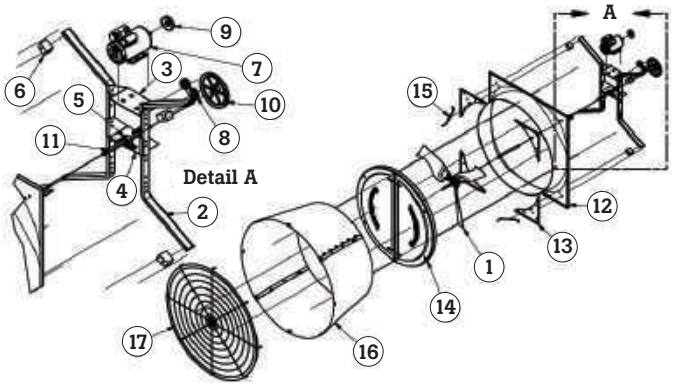

AS-57EBDBP Parts List

Item #	Description
1) **HS900-57F**	Prop 57", 3-Blade SS
HS900-57G	Prop 57", 3-Blade, Galv.
2) **AS-54X115A**	Assembly, Upright, Fan 54" Aluminum X Frame Unpainted
3) **AS-54X110**	Mount, Motor, Stainless, 54" X Frame
4) **AS-54X118**	Plate, Support Shaft ASM
5) **UCP20516G5**	Bearing 1" Pillow Block Standard 2 Set Screws
6) **AS-54X312**	Block, Isolation, Interior Air Storm X Frame
7) **HS9019A**	Motor 1.5HP 1725 RPM 1 PH 208-230V
HS9378-VFD	Motor 2 HP 1725 RPM 230/460 3 PH
8) **HS903-3**	Tensioner Rotary Assembly with Splash Guards
9) **PAK3058**	Pulley AK30-5/8
10) **PAK991**	Pulley AK99-1
11) **SHAFT1-1800T**	Shaft 1" x 18" (1/4 x 1/8 x 18 Thru Keyed)
12) **AS-57309**	Venturi, Fiberglass Panel 57"
13) **AS-57319**	Support Plate, Corner 57" FBG Fan
14) **WS901-57U**	Assembly, Butterfly 57" Fan
15) **AS-57320**	Bracket, Cone Support 57" Fan
16) **AS-57305P**	Panel Cone 57" Poly Black
17) **HS902-57E**	57" Fan Prop Exit Guard

⚠ WARNING:
This product can expose you to chemicals, including nickel, which is known to the State of California to cause cancer and birth defects or other reproductive harm. For more information, go to www.P65Warnings.ca.gov

AirStorm X-Brace 57" Fan

Model	Description	Shutter	Rough Opening	RPM	Drive	Speed	HP
AS-57EBDBP	SS Blade & Hdwr. w/cone	PVC	57" x 57"	1725	Belt	Single	1-1/2
AS-57EBDBP-V	SS w/VFD drive & cone	PVC	57" x 57"	1725	Belt	Variable	2 (3 Ph)
AS-57EBDBPG	Galv. Blade & Hdwr. w/cone	PVC	57" x 57"	1725	Belt	Single	1-1/2
AS-57EBDBPG-V	Galv w/VFD drive & cone	PVC	57" x 57"	1725	Belt	Variable	2 (3 Ph)
AS-57EBDBP-HE	High Efficiency Conversion Kit						

MODEL	BESS TEST	0.00" SP CFM	0.00" SP CFM/WATT	0.05" SP CFM	0.05" SP CFM/WATT	.10" SP CFM	.10" SP CFM/WATT	.15" SP CFM	.15" SP CFM/WATT
AS-57EBDBP	20379	33,400	26.6	31,500	23.6	29,400	20.9	26,500	17.9
AS-57EBDBP-HE	20378	30,600	31.1	28,800	27.5	25,900	23.2	22,900	19.5
AS-57EBDBPG	20376	33,200	25.7	31,300	22.8	29,200	20.2	26,600	17.7
AS-57EBDBPG-HE	20377	30,600	30.5	28,600	26.9	26,200	23.3	23,000	19.5
AS-57EBDBP-V	HS-00709*	32,613	23.3	29,300	20.7	26,534	18.1	23,796	12.5

*Hog Slat test chamber

Fiberglass Ventilation Fans

⚠ WARNING:
This product can expose you to chemicals, including nickel, which is known to the State of California to cause cancer and birth defects or other reproductive harm. For more information, go to www.P65Warnings.ca.gov

AirStorm 14" Fan

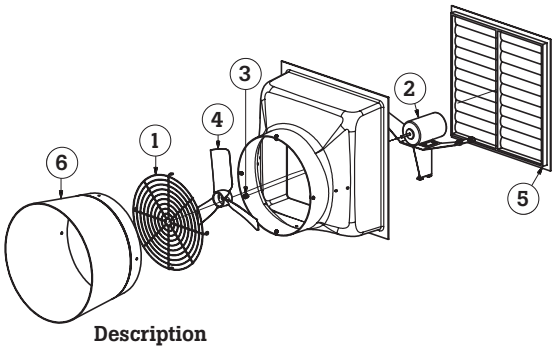

AS-14 Parts List

Item #	Description
1) **AS902-14EC**	Guard Fan 14"
2) **HS9007**	Motor 1/4 HP 1725 RPM 115/230V 50/60 Hz
HS9308-VFD	Motor 1/3 HP 1725 RPM 230/460V 3 PH
3) **HS903-1**	Nut Transtorque 1/2" w/ 7/8" Hex Nut Keyless Bushing
4) **HS900-14A**	Prop 14" Fiberglass
5) **10110A**	Shutter Pvc 19" X 19"
6) **AS-14206**	Cone 14" Poly

Model	Description	Shutter	Rough Opening	RPM	Drive	Speed	HP
AS-14EDDLP	14" w/o cone	Plastic	20" x 20"	1725	Direct	Variable	1/4
AS-14EDDLP-V	14" w/VFD drive w/o cone	PVC	20" x 20"	1725	Direct	Variable	1/3 (3 Ph)
AS-14EDDLP-L	14" w/o VFD drive & cone	PVC	20" x 20"	1725	Direct	Variable	1/3 (3 Ph)
AS-14206	14" Poly cone						

Model	Bess Test	0.00" SP CFM	0.00" SP CFM/WATT	0.05" SP CFM	0.05" SP CFM/WATT	.10" SP CFM	.10" SP CFM/WATT	.15" SP CFM	.15" SP CFM/WATT
AS-14EDDLP	18231	2340	11.3	2200	10.3	2070	9.7	1890	8.8
	18230*	2100	9.5	1990	8.9	1860	8.4	1690	7.6

*Performance shown with no cone

⚠ WARNING:
This product can expose you to chemicals, including nickel, which is known to the State of California to cause cancer and birth defects or other reproductive harm. For more information, go to www.P65Warnings.ca.gov

AirStorm 18" Fan

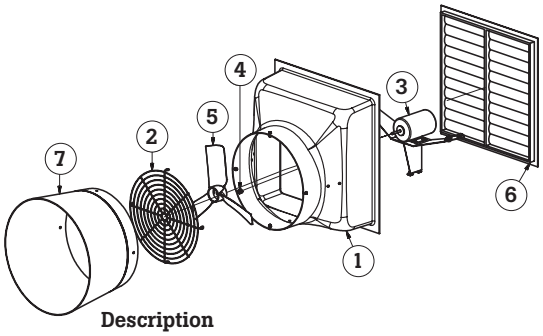

AS-18 Parts List

Item #	Description
1) **AS-18101**	Housing, 18" Fiberglass
2) **AS902-18EC**	Guard Fan, 18"
3) **HS9008**	Motor 1/3 Hp 1725 RPM Var Sp 115/230
HS9308-VFD	Motor 1/3 HP 1725 RPM 230/460V 3 PH
4) **HS903-1**	Transtorque 1/2" w/ 7/8" Hex Nut Keyless Bushing
5) **HS900-18A**	Prop 18" Fiberglass
6) **10115-5**	Shutter PVC 24-1/2" X 24-1/2" Single Door
7) **AS-18206**	Cone, 18" Poly

Model	Description	Shutter	Rough Opening	RPM	Drive	Speed	HP
AS-18EDDLP	18" w/o Cone	PVC	25.5" x 26"	1725	Direct	Variable	1/3
AS-18EDDLP-V	18" w/VFD drive w/o cone	PVC	25.5" x 26"	1725	Direct	Variable	1/3 (3 Ph)
AS-18EDDLP-L	18" w/o VFD drive & cone	PVC	25.5" x 26"	1725	Direct	Variable	1/3 (3 Ph)
AS-18206	18" Poly Cone						

*Performance shown with no cone

Model	Bess Test	0.00" SP CFM	0.00" SP CFM/WATT	0.05" SP CFM	0.05" SP CFM/WATT	.10" SP CFM	.10" SP CFM/WATT	.15" SP CFM	.15" SP CFM/WATT
AS-18EDDLP	15684	4,980	11.7	4,780	11.0	4,580	10.3	4,350	9.7
	15685*	4,490	10.0	4,310	9.5	4,120	9.0	3,920	8.5
AS-18EDDLP-V	18232	4710	11.1	4490	10.5	4290	9.9	3920	8.5

Fiberglass Ventilation Fans

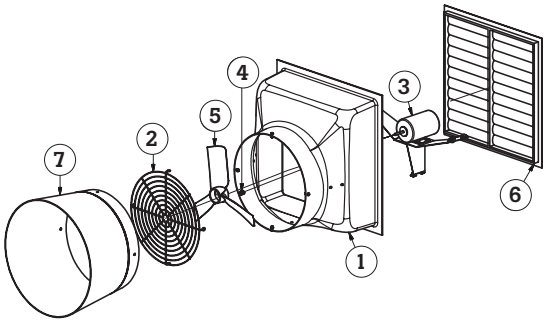

AS-24 Parts List

Item #	Description
1) **AS-24101**	Housing, 24" fiberglass
2) **AS902-24EC**	Guard Fan 24" White Hog Slat
3) **HS9006A**	Motor 1/3 Hp 1075 RPM 115/230 1PH
HS9306A-VFD	Motor 1/3 Hp 110 RPM 230/460 3 PH
4) **HS903-1**	Transtorque 1/2" w/ 7/8" Hex Nut Keyless Bushing
5) **HS900-24A**	Prop 24" Fiberglass
6) **101194-5**	Shutter PVC 32-1/2" x 32-1/2" Double Door
7) **AS-24206**	Cone, 24" poly

⚠ WARNING:
This product can expose you to chemicals, including nickel, which is known to the State of California to cause cancer and birth defects or other reproductive harm. For more information, go to www.P65Warnings.ca.gov

AirStorm 24" Fan

Model	Description	Shutter	Rough Opening	RPM	Drive	Speed	HP
AS-24EDDLP	24" w/o cone	PVC	34.5" x 34.5"	1075	Direct	Variable	1/3
AS-24EDDLP-V	24",w/VFD drive w/o cone	PVC	34.5" x 34.5"	1100	Direct	Variable	1/3 (3 Ph)
AS-24EDDLP-L	24",w/o VFD drive & cone	PVC	34.5" x 34.5"	1100	Direct	Variable	1/3 (3 Ph)
AS-24206	24" Poly Cone						

Model	Bess Test	0.00" SP CFM	0.00" SP CFM/WATT	0.05" SP CFM	0.05" SP CFM/WATT	.10" SP CFM	.10" SP CFM/WATT	.15" SP CFM	.15" SP CFM/WATT
AS-24EDDLP	17295	7,330	16.7	6,930	15.2	6,570	14.1	6220	12.9
	17298*	6,430	13.6	6,140	12.7	5,750	11.7	5,350	10.7

*Performance shown with no cone

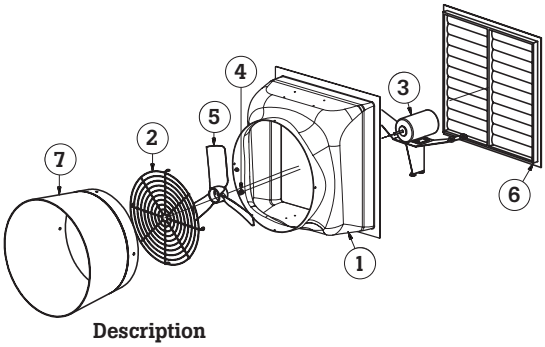

AS-36 Parts List

Item #	Description
1) **AS-36101A**	Housing, 36" Fiberglass
2) **AS902-36EC**	Wire Guard, 36"
3) **HS9009A**	Motor, 1/2 HP, 850 RPM, 115/230, 1 PH
HS9309-VFD	Motor, 1/2 HP, 850 RPM, 230/460 3 PH
4) **HS903-1**	Transtorque 1/2" w/ 7/8" Hex Nut Keyless Bushing
5) **HS900-36E**	Prop 36" Fiberglass
6) **101204**	Shutter PVC, 42" x 42"
7) **AS-36206**	Cone, 36" poly

⚠ WARNING:
This product can expose you to chemicals, including nickel, which is known to the State of California to cause cancer and birth defects or other reproductive harm. For more information, go to www.P65Warnings.ca.gov

AirStorm 36" Fan

Model	Description	Shutter	Rough Opening	RPM	Drive	Speed	HP
AS-36EDDLPA	36" w/o cone	Plastic	43.5" x 43.5"	850	Direct	Variable	1/2
AS-36EDDLPA-V	36", w/VFD drive w/o cone	Plastic	43.5" x 43.5"	850	Direct	Single	1/2 (3 Ph)
AS-36EDDLPA-L	36", w/o VFD drive & cone	Plastic	43.5" x 43.5"	850	Direct	Single	1/2 (3 Ph)
AS-36206	36" Poly Cone						

*Performance shown with no cone

Model	Bess Test	0.00" SP CFM	0.00" SP CFM/WATT	0.05" SP CFM	0.05" SP CFM/WATT	.10" SP CFM	.10" SP CFM/WATT	.15" SP CFM	.15" SP CFM/WATT
AS-36EDDLP	15556	11,550	20.6	10,780	18.4	9,940	16.4	8,900	14.2
	15557*	10,510	17.7	9,790	16.0	8,980	14.4	8,150	12.8

⚠ WARNING:
This product can expose you to chemicals, including nickel, which is known to the State of California to cause cancer and birth defects or other reproductive harm. For more information, go to www.P65Warnings.ca.gov

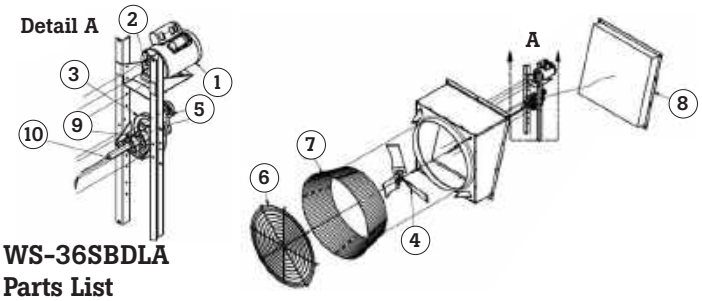

36" Galvanized Slant Wall Fan

WS-36SBDLA Parts List

Item #	Description
1) **HS9015A**	Motor 1/2 HP 1725 RPM 115/208-230V 50/60 Hz
HS9315A-VFD	Motor 1/2 HP 1725 RPM 230/460V 3P VFD Compatible
2) **PAK3058**	Pulley AK30-5/8
3) **PAK641**	Pulley 6.25" X 1"
4) **HS900-36H**	Prop 36" Galvanized 4 Blade 1" Shaft
5) **HS903-8**	Tensioner Rotary Assembly 1.7" Light Gray
6) **HS902-36E**	Wire Guard
7) **WS-36105**	Cone Section (4 req.)
8) **HS901-36L**	36" Alum Shutter
9) **UCP20516G5**	Bearing 1" Pillow Block - 2 Set Screws
10) **SHAFT1-1000T**	Shaft, 1" x 10" Keyed.
N/S) **HS903-7A**	Belt Power Twist Gray

Model	Description	Shutter	Rough Opening	Voltage	Drive	Speed	HP
WS-36SBDLA	36"	Aluminum	40-3/4" (W) x 42-3/4" (H)	115/230	Belt	Single	1/2
WS-36SBDLA-V	36" VFD w/ Drive	Aluminum	40-3/4" (W) x 42-3/4" (H)	230	Belt	Variable	1/2 (3-Ph)
WS-36SBDLA-L	36" VFD w/o Drive	Aluminum	40-3/4" (W) x 42-3/4" (H)	230/460	Belt	Variable	1/2 (3-Ph)

Model	Bess Test	0.00" SP CFM	0.00" SP CFM/WATT	0.05" SP CFM	0.05" SP CFM/WATT	.10" SP CFM	.10" SP CFM/WATT	Airflow Ratio
WS-36SBDLA	18225	11,080	18.2	10,470	16.0	9970	14.8	.82

⚠ WARNING:
This product can expose you to chemicals, including nickel, which is known to the State of California to cause cancer and birth defects or other reproductive harm. For more information, go to www.P65Warnings.ca.gov

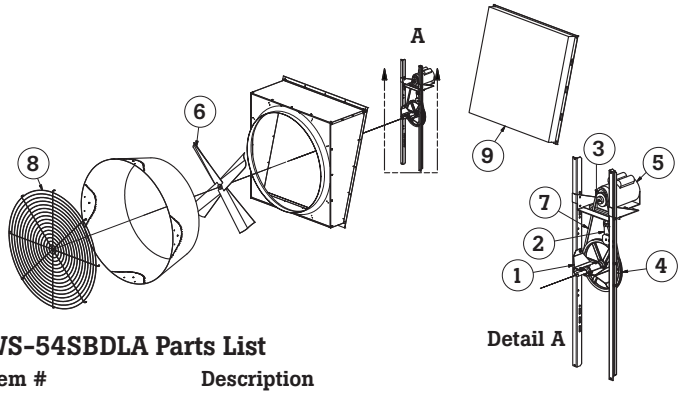

54" Galvanized Slant Wall Fan

WS-54SBDLA Parts List

Item #	Description
1) **HS903-2**	Jack Shaft Housing Galvanized
2) **HS903-3**	Tensioner Rotary Assembly w/ Splash Guards
3) **PAK2858A**	Pulley AK28-5/8
4) **PAK1041**	Pulley AK104-1
5) **HS9019A**	1-1/2 Hp motor, 1725 RPM, 230 Volt
HS9378-VFD	2 Hp motor, 1725 RPM, 230/460 VFD compatible
6) **HS900-54B**	Prop 54" 4-Blade Galvanized WS Fan
7) **HS903-7A**	Belt Power Twist Gray
8) **HS902-1**	Wire Guard, 68"
9) **HS901-1**	Shutter 54" WS SW Fan 58" x 59" x 2.5"

Model	Description	Shutter	Rough Opening	Voltage	Drive	Speed	HP
WS-54SBDLA	54"	Aluminum	60-3/4" (W) x 60-1/2" (H)	230	Belt	Single	1-1/2
WS-54SBDLA-V	54" VFD w/ Drive	Aluminum	60-3/4" (W) x 60-1/2" (H)	230/460	Belt	Variable	2 (3-Ph)

Model	Bess Test	0.00" SP CFM	0.00" SP CFM/WATT	0.05" SP CFM	0.05" SP CFM/WATT	.10" SP CFM	.10" SP CFM/WATT	Airflow Ratio
WS-54SBDLA	14344	28,400	23.6	27,100	21.5	25,400	19.2	.75

Replacement parts for Windstorm 52" Butterfly Fans

⚠WARNING:
This product can expose you to chemicals, including nickel, which is known to the State of California to cause cancer and birth defects or other reproductive harm. For more information, go to www.P65Warnings.ca.gov

Models purchased before April 2014

WS-F52B High Volume - 52"

Item #	Description
PAK4658	Cast motor pulley 4.6" x 5/8" bore
PAFD112100	Composite pulley 11.25" x 1" bore
HSAX64	Cogged v-belt, 1/2" x 66"
FS0604ZF	Idler Assy, 5.5" arm x 3" pulley
SHAFT1-1150	Shaft 1" x 11.5"
HS9019A	1.5 Hp motor, 115/208-230, 56H, 1725 rpm

WS-52B-HE High Efficiency - 52"

Item #	Description
PAK3958	Cast motor pulley 3.75" x 5/8" bore
PAFD104100	Composite pulley 10.25" x 1" bore
HSAX63	Cogged v-belt, 1/2" x 65"
FS0604ZF	Idler Assy, 5.5" arm x 3" pulley
SHAFT1-1150	Shaft 1" x 11.5"
HS9019A	1.5 Hp motor, 115/208-230, 56H, 1725 rpm

Models purchased April 24 to November 2016

WS-F52B2 High Volume - 52"

Item #	Description
PAK4158	Cast motor pulley 3.95" x 5/8" bore
PAK941	Composite pulley 9.25" x 1" bore
HSAX61	Cogged v-belt, 1/2" x 63"
FS0604ZF	Idler Assy, 5.5" arm x 3" pulley
SHAFT1-1150	Shaft 1" x 11.5"
HS9019A	1.5 Hp motor, 115/208-230, 56H, 1725 rpm

WS-52B2-HE2 High Efficiency - 52"

Item #	Description
PAK4458	Cast motor pulley 4.25" x 5/8" bore
PAFD112100	Composite pulley 11.25" x 1" bore
HSAX64	Cogged v-belt, 1/2" x 66"
FS0604ZF	Idler Assy, 5.5" arm x 3" pulley
SHAFT1-1150	Shaft 1" x 11.5"
HS9019A	1.5 Hp motor, 115/208-230, 56H, 1725 rpm

Models purchased Nov 2016 to Present

WS-F52B2A High Volume - 52"

Item #	Description
PAK4158	Cast motor pulley 3.95" x 5/8" bore
PAK941	Composite pulley 9.25" x 1" bore
HSAX57	Cogged v-belt, 1/2" x 59"
HS903-3	Idler Assy, 6.5" arm x 2.75" pulley
SHAFT1-1000T	Keyed shaft, 1" x 10" long
HS9019A	1.5 Hp motor, 115/208-230, 56H, 1725 rpm

WS-F52B2-HE2A High Efficiency - 52"

Item #	Description
PAK4458	Cast motor pulley 4.25" x 5/8" bore
PAFD112100	Composite pulley 11.25" x 1" bore
HSAX59	Cogged v-belt, 1/2" x 61"
HS903-3	Idler Assy, 6.5" arm x 2.75" pulley
SHAFT1-1000T	Keyed shaft, 1" x 10" long
HS9019A	1.5 Hp motor, 115/208-230, 56H, 1725 rpm

VFD Improves Performance of Variable Speed Fans

VFD Control

Controller converts low voltage from house controller and sends a related signal to a fan motor in hertz. Allows for more accurate control of variable speed and cfm output.

- 240 Volt
- Waterproof NEMA 4X enclosure
- Manual override

#HSFI-1004..... 1/2 Hp
#HSFI-1001..... 1 Hp
#HSFI-1002..... 2 Hp

RFI Filters

RFI Filters, or radio-frequency interference filters mitigate the high frequency electromagnetic disturbance present on the power and signal lines.

#HSFI-RFI.... Radio-Frequency Interference filters

		CFM @ .05" Static Pressure			
		60Hz	52Hz	44Hz	36Hz
AS-18EDDLP-V	18" VFD	4490	3910	3230	2380
AS -24EDDLP-V	24" VFD	6820	5980	5010	3810
AS-36EDDLP-V	36" VFD	11730	9870	7710	5360
AS-51XEBDLP-V	51" VFD	25800	22300	17500	11900
AS-54XEBDLP-V	54" VFD	28900	24900	18900	12700
AS-57EBDBP-V	57" VFD	29300	25800	22400	17400

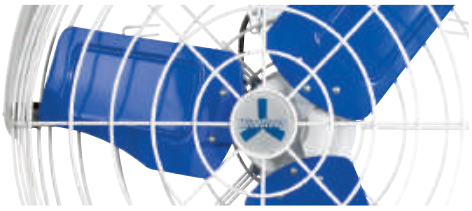

⚠ WARNING:
This product can expose you to chemicals, including nickel, which is known to the State of California to cause cancer and birth defects or other reproductive harm. For more information, go to www.P65Warnings.ca.gov

Windstorm Circulation Fans

- Wide spacing reduces the performance-robbing buildup of debris & feathers on the fan guard.
- Complete with pre-wired 10′ cord for 115 volt.
- Totally enclosed motor with built-in three (18″) or two (20″ & 24″) speed control

WS-18C3 18″ Circulation Fan 3-Speed

• AIR DELIVERY	
Airflow*	5250/4850/4300
Bess Test Number	c19595
• SPECS	
Motor size	1/5
Voltage	120
Speed	3
Amps	.92/.85/.79
Rpm	1550/1350/1250
Frequency (Hz)	60
Speed Controller Included:	Manual 3-sp
Cord Included:	Yes, 120 V, pre-wired
Cord Length:	10′
Mount Style:	Ceiling/wall
Mount Included:	Pre-installed
Guard Spacing (in):	2″
Product Weight (lb):	16

WS-20C2 20″ Circulation Fan 2-Speed

• AIR DELIVERY	
Airflow*	5600/4700
• SPECS	
Motor size	1/11
Voltage	120
Speed	2
Amps	1.3/1.13
Rpm	1500/1250
Frequency (Hz)	60
Speed Controller Included:	Manual 2-sp
Cord Included:	Yes, 120 V, pre-wired
Cord Length:	10′
Mount Style:	Ceiling/wall
Mount Included:	Pre-installed
Guard Spacing (in):	2″
Product Weight (lb):	18

WS- 24C2 36″ Circulation Fan 2-Speed

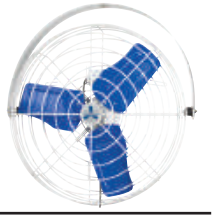

• AIR DELIVERY	
Airflow*	6350/5500
• SPECS	
Motor size	1/7
Voltage	120
Speed	2
Amps	1.3/1.23
Rpm	1100/950
Frequency (Hz)	60
Speed Controller Included:	Manual 2-sp
Inverter Compatible:	No
Cord Included:	Yes, 120 V, pre-wired
Cord Length:	10′
Mount Style:	Ceiling/wall
Mount Included:	Pre-installed
Guard Spacing (in):	2″
Product Weight (lb):	24

Windstorm Stir Fans

⚠ WARNING:
This product can expose you to chemicals, including nickel, which is known to the State of California to cause cancer and birth defects or other reproductive harm. For more information, go to www.P65Warnings.ca.gov

- Heavy galvanized ceiling mount bracket tilts to adjust airflow direction.
- Totally enclosed variable speed motor pairs with most speed controls (sold separately) to vary air delivery.
- 115/230 Volt motor. Pre-wired cord not included.

WS-20CV 20″ Stir Fan Variable Speed

• AIR DELIVERY	
Airflow* (thrust cfm)	3370
Efficiency* (thrust cfm/W)	11.7
5xD Centerline Velocity (fpm)	1050
Bess Test Number	c20186
• SPECS	
Motor size	1/3 Hp
Voltage	115/230
Speed	Single/variable
Amps	3.8/1.9
Rpm	1700
Speed Controller Included:	No
Cord Included:	No
Cord Length:	N/A
Mount Style:	Ceiling
Mount Included:	Yes
Guard Spacing (in):	1/2
Product Weight (lb):	36

WS-24CV 24″ Stir Fan Variable Speed

• AIR DELIVERY	
Airflow* (thrust cfm)	5200
Efficiency* (thrust cfm/W)	12.1
5xD Centerline Velocity (fpm)	1190
Bess Test Number	c20187
• SPECS	
Motor size	1/2 Hp
Voltage	115/230
Speed	Single/variable
Amps	4.8/2.4
Rpm	1725
Frequency (Hz)	60/50
Speed Controller Included:	No
Cord Included:	No
Cord Length:	N/A
Mount Style:	Ceiling
Mount Included:	Yes
Guard Spacing (in):	1/2
Product Weight (lb):	47

WS-36CV 36″ Stir Fan Variable Speed

• AIR DELIVERY	
Airflow* (thrust cfm)	9800
Efficiency* (thrust cfm/W)	19
5xD Centerline Velocity (fpm)	1040
Bess Test Number	c20248
• SPECS	
Motor size	1/2 Hp
Voltage	115/230
Speed	Single/variable
Amps	6.0/3.0
Rpm	825
Frequency (Hz)	60/50
Speed Controller Included:	No
Cord Included:	No
Cord Length:	N/A
Mount Style:	Ceiling
Mount Included:	Yes
Guard Spacing (in):	1/2
Product Weight (lb):	65

Hog Slat® replacement pillow block bearing for 1" shafts with grease-able zerk. Suitable for use as the shaft bearing for Airstream® curtain machines and Munters® fan shaft application.

Item #	Description
16G	Hog Slat® 1" Pillow Block Shaft Bearing

Wide inner-ring set screw locking ball bearing are double sealed, self-aligning by up to three degrees, and re-greasable for easy maintenance.

Item #	Description
UCP20516G5	Pillow Block Mounted Ball Bearing, 1" Bore, Set Screw

#SBPP20516KG5

#SB20516KG5

Narrow inner-ring set screw locking bearings are factory lubricated and double sealed for maintenance-free operation.

Item #	Description
SBPP20516KG5	Pillow Block Mounted Ball Bearing, 1" Bore, Set Screw
SB20516KG5	Ball Bearing Insert, 1" Bore, Set Screw

Fits Chore-Time® slant wall, cone, EZ box and panel fans. Replacement for Chore-Time® part number: 43654

Item #	Description
SBLF205-16	2 hole 1" flange bearing for Chore-Time® fans

#SBRPP205-16KG5

#SBRPP20412KG5

#SBR20412KG5

Narrow inner-ring set screw locking bearings come with a rubber boot that functions as a vibration and shock dampener to extend bearing life. They are double sealed and are commonly used in agricultural and air handling applications. Factory lubricated and sealed for maintenance-free operation.

Item #	Description
SBRPP205-16KG5	Pillow Block Mounted Ball Bearing, 1" Bore, Set Screw
SBRPP20412KG5	Pillow Block Mounted Ball Bearing, 3/4" Bore, Set Screw
SBR20412KG5	Ball Bearing Insert, 3/4" Bore, Set Screw

#EAP20516FP9

#EBP20516KP8G5

Industry standard mounting dimensions allow for easy installation and these units can accommodate up to three degrees of shaft mis-alignment. They are double sealed and a grease fitting is provided for easy maintenance.

Item #	Description
EAP20516FP9	Pillow Block Mounted Ball Bearing, 1" Bore, Eccentric Collar, Economy
EBP20516KP8G5	Pillow Block Mounted Ball Bearing, 1" Bore, Set Screw, Economy

Item #	Description
CA6204	Single row ball bearing for American Coolair® 48" NBF fans

Item #	Description
STD6205	Dixie single row fan bearing 25mm., for ACME®/ Coolair® fans

Box Fans

Windstorm™ box fans provide outstanding performance at an affordable price. They feature heavy galvanized steel housings with a secure wire guard which is easily removed for service.

Item#	Hp	RPM	Thrust (cfm)	cfm/W
WS-36BDD	1/2	850	9,950	21.7
WS-48BDD	1	850	16,900	19.0
WS-36BDD3	1/2	850, 3 Phase		

⚠ WARNING:
This product can expose you to chemicals, including nickel, which is known to the State of California to cause cancer and birth defects or other reproductive harm. For more information, go to www.P65Warnings.ca.gov

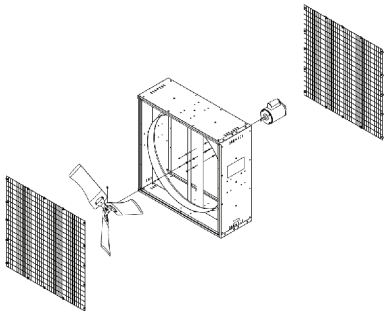

36" Box Fan Replacement Parts

#HS9005A ..... Motor, 1/2 Hp 850 RPM 115/230V 60Hz
#HS900-36D ..... Prop 36" Galvanized 3 Blade 0.625" Shaft OD
#HSCS-002 ..... Cord SJ 14/3 9' 220 V
#WS-36A-5 ..... Wire Mesh Guard, 36"

48" Box Fan Replacement Parts

#N9028 ..... Motor, 1 Hp 850 RPM 230V 60Hz
#HS900-48A ..... Prop 48" Galvanized 3 Blade 0.625" Shaft OD
#HSCS-002 ..... Cord SJ 14/3 9' 220 V
#WS-48403 ..... Wire Mesh Guard, 48"

*For OSHA compliant guards, contact your local Hog Slat representative.

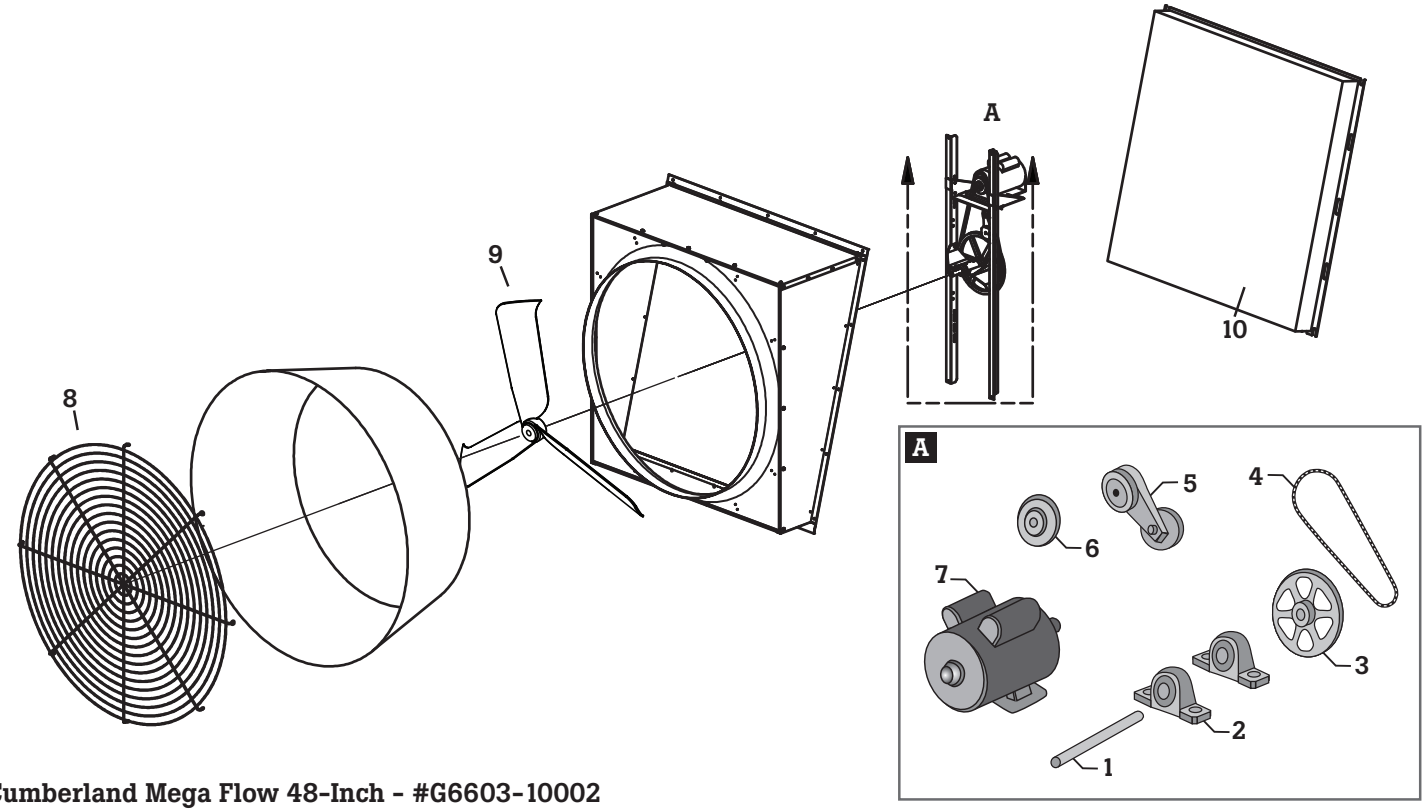

Cumberland Mega Flow 48-Inch - #G6603-10002

Key	Item#	Description
1	SHAFT1-763T	Shaft-1" x 7-5/8"
2	UCP20516G5	Pillow Block Bearing - 1"
3	PAFD104100	Pulley - 10.4"
4	BAX60	Belt, AK60, Cogged
5	FS0604ZF	Idler Assy 3.00" V-Belt AL
6	PAK3258	Pulley AK32-5/8
7	HS9000	Motor, 1725 RPM, 1 hp, 120/240
8	G6403-0143	Guard-48 2" Cone
9	G13-0235	Prop, Galv.48-B, 3 Blade, Lg Orf
NS	47813	Key Shear 1/4" x 1/4" x 1.00"
10	H6611-9023	Shutter, 54.25 x 54.25, w/ Galv Frame & Alum Louvers

Key	Item#	Description
NS	G1040-0105	Latch, Draw Tension Zinc Latch
NS	Cone	
	G0404-10291	36/48 Cone Brkt (4 Req)
	G0404-10332	48'' Cone Section (4 Req)
NS	Galvanized Housing	
	G0404-11495	48" Cone Sup Brkt
	G0404-6977	48" Panel Bottom
	G0404-6978	48" Panel Top
	G0404-6979	48" Panel Left
	G0404-6980	48" Panel Right
	G0404-10318-B0	48" Orifice
	G0404-10335	48'' Vert Support

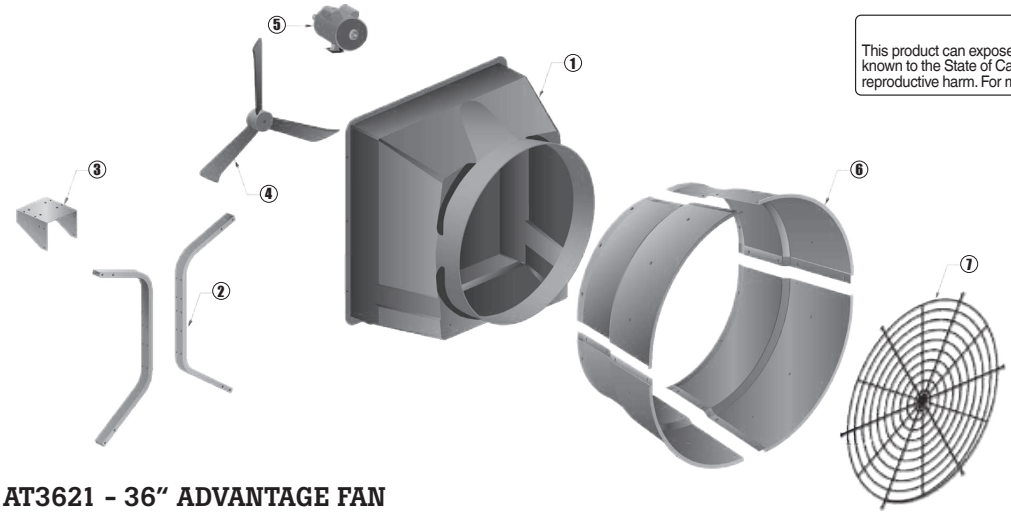

⚠WARNING:
This product can expose you to chemicals, including nickel, which is known to the State of California to cause cancer and birth defects or other reproductive harm. For more information, go to www.P65Warnings.ca.gov

AEROTECH AT3621 – 36" ADVANTAGE FAN

Key	Description	OEM#	G.S. Part #
1	Housing Fiberglass 36" Fan	#AFH2136A	N/A
2 & 3	Strut H Conversion 36" DD Advtg	#AFH1952	N/A
4	Blade 36" 5/8" Bore with Set Screw	#AFP1013SS	N/A
5	Motor 1/2 Hp 850 RPM (variable speed)	#AFM1011	#HS9016
5	Motor 1/2 Hp 850 RPM (single speed)	#AFM1048	N/A
6	Cone 36" Fiberglass 4 sections (+guard and hdw.)	#A365FC	N/A
7	Guard Round PVC Coated 36" For Cone	#AFH1336	N/A
N/S	Shutter Plastic 41-7/8"	#APZ36	#101203-1-8

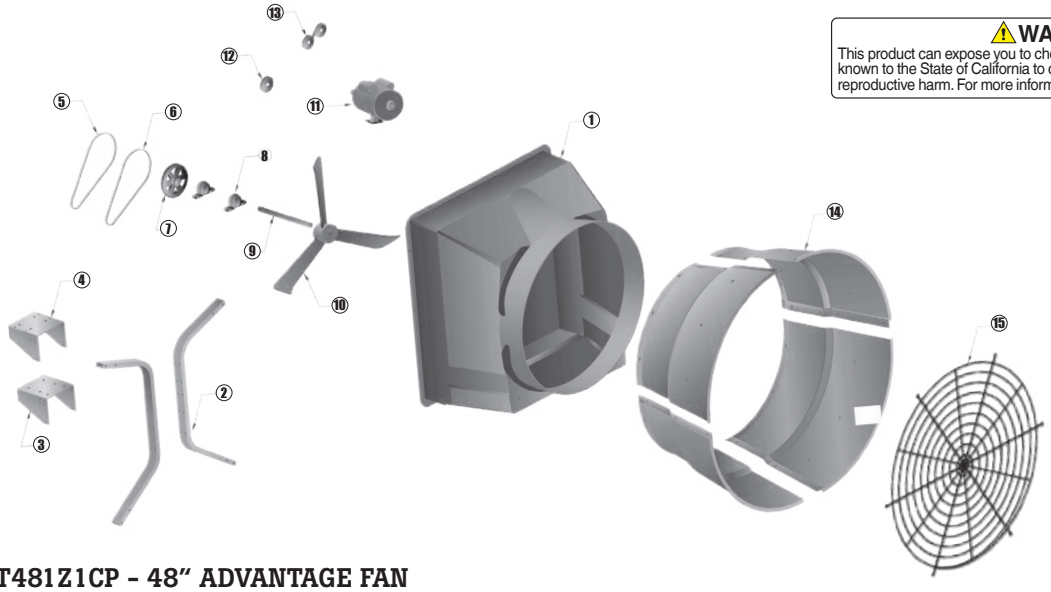

⚠WARNING:
This product can expose you to chemicals, including nickel, which is known to the State of California to cause cancer and birth defects or other reproductive harm. For more information, go to www.P65Warnings.ca.gov

AEROTECH AT481Z1CP – 48" ADVANTAGE FAN

Key	Description	OEM#	G.S. Part #
1	Housing Fiberglass 48"	#AFH2148A	N/A
2,3,4	Conversion Kit 48" H Strut	#AFH1945	N/A
5	Belt V 1/2" x 49" Kevlar	#AFH1410	#HSA47K
5	Belt V 1/2" x 49" Standard	N/A	#HSA47
6	Belt Link Red Fenner Drives	#AFH2053	N/A
7	Sheave For Prop 1" Ak104	#AFH2034	#PAK1041
8	Bearing 1" Pillow Block With Zirk	#AFH2013	16G
9	Shaft for Propeller 1"	AFH2036	N/A
10	Blade 48" Bd 3 Bld Al 1" bore with Set Screw	#AFP1016SS	N/A
N/S	Motor 1 HP 1725 RPM 3 Phase	#AFM1029	#HS9301
11	Motor 1 HP 1725 RPM 56 FR 120/240 V 5/8" Shaft	#AFM1024	#HS9000
12	Pulley AK34-5/8	#AFH2032	#PAK3458
13	Pulley Idler V-Belt 3" (Pulley Only)	#AFH2406	#VX3012
14	Cone 48" Fiberglass 4 Sections w/ Guard & Hardware	#A481FC	N/A
15	Guard Round PVC Coated For 48" Fan Cone w/ Hardware	#AFH2648	N/A
N/S	Shutter Plastic 53-7/8"	#APZ48	#101209-1-8

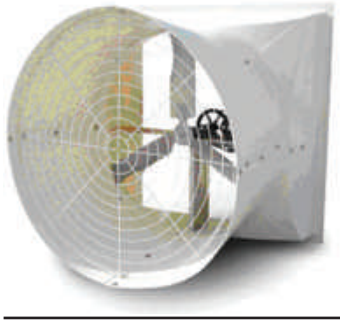

COMPETITOR SERIES 54" FANS

- A durable and aerodynamic fiberglass housing and discharge cone backed by a limited life-time warranty
- A high performance stainless steel propeller
- A PVC shutter included with fan. (Part #PS-59C)
- A high efficiency 1-3/4 HP motor in single or three phase
- An automatic belt tensioning system
- Heavy gauge, corrosion resistant aluminum drive train support
- Stainless steel hardware
- An optional winter closure panel (Part #20-0697)

⚠ WARNING:
This product can expose you to chemicals, including nickel, which is known to the State of California to cause cancer and birth defects or other reproductive harm. For more information, go to www.P65Warnings.ca.gov

Model#	HP	Phase	RPM	CFM/.05sp	CFM/per watt @05	Framed Opening
#GCS54C1-P	1.75	1	587	30,044	20.2	58.0" W X 60.5" T
#GCS54C3-P	1.75	3	587	30,044	20.2	58.0" W X 60.5" T

AP PERFORMER FANS

- Fiberglass housing
- Rugged motors with hidden internal capacitor
- 5/16" aluminum motor mounts
- Low maintenance PVC shutters
- Balanced propellers constructed of composite fiberglass

Torque Nuts

#HS903-1 ..... 1/2" torque nut
#6202107 ..... 5/16" torque nut
#6202115 ..... 5/8" torque nut

⚠ WARNING:
This product can expose you to chemicals, including nickel, which is known to the State of California to cause cancer and birth defects or other reproductive harm. For more information, go to www.P65Warnings.ca.gov

⚠ WARNING:
This product can expose you to chemicals, including nickel, which is known to the State of California to cause cancer and birth defects or other reproductive harm. For more information, go to www.P65Warnings.ca.gov

Item#	Description	Fan	CFM/.05	CFM/.10	R.O. W x H
#GAPP-12F	1/4 HP - 12" fan with PVC shutter	12"	1,447	1,334	16-1/2" x 17-3/8"
#GAPP-14F	1/4 HP - 14" fan with PVC shutter	14"	2,385	2,270	19-3/8" x 19-5/8"
#GAPP-14FC	1/4 HP - 14" fan with PVC shutter and cone	14" w/cone	2,710	2,610	
#GAPP-18F	1/3 HP - 18" fan with PVC shutter	18"	4,205	3,964	25-1/2" x 25-1/2"
#GAPP-18FC	1/3 HP - 18" fan with PVC shutter and cone	18" w/cone	4,890		4,720
#GAPP-24F	1/3 HP - 24" fan with PVC shutter 24"	6,002	5,463		35" x 35"
#GAPP-24FC	1/3 HP - 24" fan with PVC shutter and cone 24" w/cone	7,120	6,710		
#GAPP-36F	1/2 HP - 36" fan PVC shutter 36"	10,297	9,392		43-3/4" x 43-3/4"
#GAPP-36FC	1/2 HP - 36" fan PVC shutter and cone	36" w/cone	11,310		10,360
#GAPPB-50	1 HP - 50" fan with PVC shutter	50"	20,151	17,792	55-1/2" x 55-1/2"
#GAPPB-50C	1 HP - 50" fan with PVC shutter and cone	50" w/cone	23,200		20,577

REPLACEMENT MOTORS FOR AP PERFORMER FANS

Item#	Description	Fan
#HS9028KIT	115/230 V, 1 ph. 3300 RPM	GMB-10
#HS9007	1/4 HP, 115/230 V, 1 ph, 1725 RPM	GAPP-12
#HS9007	1/4 HP, 115/230 V, 1 ph, 1725 RPM	GAPP-14
#HS9008	1/3 HP, 115/230 V, 1 ph, 1725 RPM	GAPP-18
#HS9006A	1/3 HP, 115/230 V, 1 ph, 1100 RPM	GAPP-24
#HS9009A	1/2 HP, 115/230 V, 1 ph, 900 RPM	GAPP-36
#HS9019A	1-1/2 HP, 115/208-230 V, 1 ph., 1725 RPM, 1 spd	GAPP-50
#HS9019A	1-1/2 HP, 115/208-230 V, 1 ph., 1725 RPM, 1 spd	GFS52CL16SA

⚠ WARNING:
This product can expose you to chemicals, including nickel, which is known to the State of California to cause cancer and birth defects or other reproductive harm. For more information, go to www.P65Warnings.ca.gov

REPLACEMENT PROPS FOR AP PERFORMER FANS

Item#	Description	Fan
#G13-0017	Prop, Composite, 9-3/8" dia, 5/16" shaft	GMB-10
#G13-0130	Prop, Composite, 12" dia, 1/2" shaft	GAPP-12
#G13-0106	Prop, Composite, 14-3/4" dia, 1/2" shaft	GAPP-14
#G13-0107	Prop, Composite, 19" dia, 1/2" shaft	GAPP-18
#G13-0209	Prop, Composite, 25-1/4" dia, 1/2" shaft	GAPP-24
#G13-0129	Prop, Composite, 36" dia, APP and MA	GAPP-36
#G13-0044	Prop, Composite, Performer Fan 50	GAPP-50
#G13-0132SS	Prop, Boss Fan 52, Stainless Steel	GFS52CL16SA

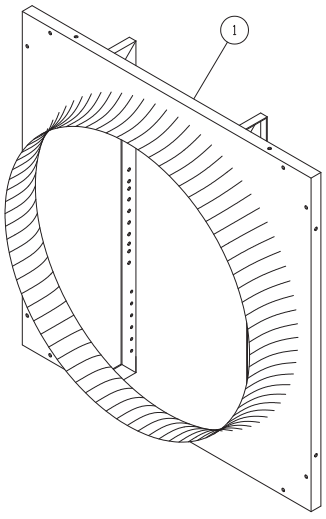

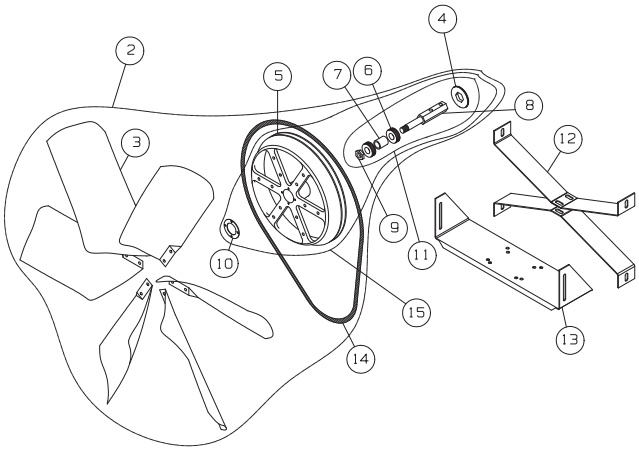

⚠ WARNING:
This product can expose you to chemicals, including nickel, which is known to the State of California to cause cancer and birth defects or other reproductive harm. For more information, go to www.P65Warnings.ca.gov

#CA14-113-44-1

#STD6203

#CA14-119-5-1

#CA12-174-62-3

#CA14-183-4-3

#CA14-232-15-1

Key	Description	CANCF36	CANCFA36	CANCFA48	CANCFB48
1	Fan Panel Assembly	CANCF36/LBA	CANCFA36/LBA	CANCFA48/LBA	CANCFB48/LBA
2	Blade Assembly	CA14-235-63-1	CA14-235-62-1	CA14-235-90-1	CA14-235-72-1
3	Blades	CA14-113-33-1	CA14-113-33-1	CA14-113-60-1	CA14-113-44-1
4	Bearing Protector	CA12-174-62-2	CA12-174-62-2	CA12-174-62-3	CA12-174-62-3
5	Disc	CA14-132-17-1	CA14-132-17-1	CA14-132-15-1	CA14-132-15-1
6	Bearings	STD6203	STD6203	STD6205	STD6205
7	Spacer	CA14-183-4-5	CA14-183-4-5	CA14-183-4-3	CA14-183-4-3
8	Shaft	CA14-180-20-1	CA14-180-20-1	CA14-180-6-3	CA14-180-6-3
9	Locknut	CA1202.7-5/8E	CA1202.7-5/8E	CA1202.7-7/8E	CA1202.7-7/8E
10	Bearing Cap	CA14-119-4-1	CA14-119-4-1	CA14-119-5-1	CA14-119-5-1
11	Shaft Assembly	CA14-208-5-1	CA14-208-5-1	CA14-208-5-5	CA14-208-5-5
12	X-Braces	CA14-115-6-4	CA14-115-6-4	CA14-115-6-5	CA14-115-6-5
13	Motor Bracket	CA14-161-15-5	CA14-161-15-5	CA14-161-15-6	CA14-161-15-6
14	Belt	HSA58	HSA58	HSA71	HSA71
15	Disc Assembly	CA14-229-10-4	CA14-229-10-4	CA14-229-10-7	CA14-229-10-7

ADJUST-A-BAFFLE

- 1" polystyrene with fiberglass coating
- Flexible PVC hinge
- Available in 8", 12", 16", 18", 20" and 24" widths
- 8' sections

How to order your Adjust-A-Baffle:

1. Order Baffle and Hinge separately (must order in 65' lengths):
#GAP-1896 ..... 1" x 8" x 96"
#GAP-11296 ..... 1" x 12" x 96"
#GAP-11696 ..... 1" x 16" x 96"

2. Order Baffle and Hinge separately (must order in 65' lengths)
#GAP-WS65 ..... Baffle weather-strip - 65'
#GAP-HS65 ..... Hinge for baffle system - 65'

3. Order S.S. Rod & Clamp package (must order in 100' lengths)
#GRCP-SW-B ..... 100' rod & clamp package
(INCLUDES: 105'-1/8" SS rod; 33-Azium Nuts; 60-3/16" x 1" lag eyebolts; 33-30" polyester lift cords; 33-Nylon fender washers; 40-1/8" Cable Clamps)

4. Order S.S. Cable to connect rod to winch & closure spring
#61739 ..... 1/8" stainless steel cable
#617321 ..... 1/8" stainless steel cable clamp

5. Order Winch & Hardware
#DL61737 ..... 1400 lb. winch w/cable keeper
#61740 ..... L-bracket for winch
#60516 ..... 3/8" x 1-1/4" bolt (2 required)
#60682 ..... 3/8" lock nut (2 required)
#60670 ..... 3/8" x 1-1/2" flat fender washer (2 required)

6. Order Corner Pulleys (one for Winch, one for Spring Return End)
#HSH001 ..... 3-1/2" needle bearing pulley
#61744 ..... Pulley bracket
#60649 ..... 1" x 2-1/2" x 5/16" U-bolt
#60681 ..... 5/16" lock nut

7. Order Baffle Return Spring (takes place of counter weight)
#HS17110 ..... Baffle return spring

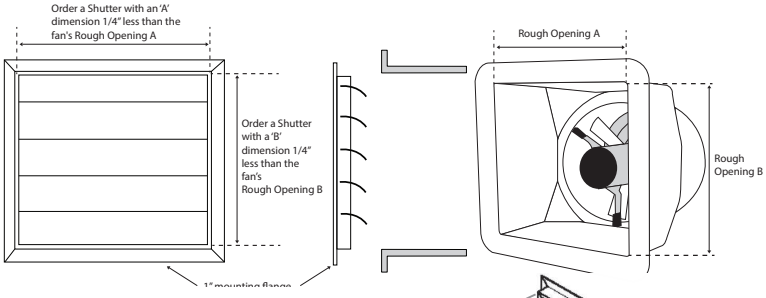

- Low maintenance
- PVC vanes with true airfoil design
- Heavy PVC frame with reinforced corners
- 1" flange
- Many sizes available
- Spring steel galvanized rods extended entire length of the shutter with unique lock down ends

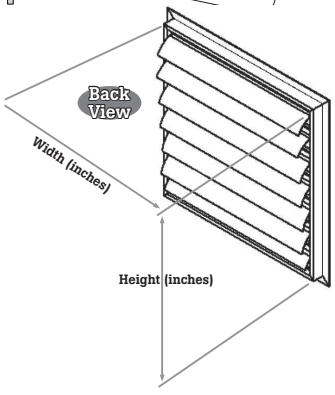

We build custom sizes!

Call us at 800-949-4647 with a fan rough opening size.

Item#	Color	Size (A x B)
10105	White	14" x 14"
10106	White	15" x 15"
10106-1	White	15-/8" x 15-1/8"
10107	White	16" x 16"
10107-5	White	16-1/2" x 16-1/2"
10108	White	17" x 17"
101081	White	17-1/2" x 17-1/2"
10109	White	18" x 18"
10109-1	White	18-1/8" x 18-1/8"
10109-3	White	18-3/8" x 18-3/8"
10110	White	19" x 19"
10111	White	20" x 20"
10112	White	21" x 21"
10112-3	White	21-3/8" x 21-3/8"
10112-5	White	21-1/2" x 21-1/2"
10112-6	White	21-5/8" x 21-5/8"
10113	White	22" x 22"
10113-5	White	22-1/2" x 22-1/2"
10115	White	24" x 24"
10115-3	White	24-3/8" x 24-3/8"
10115-5	White	24-1/2" x 24-1/2"
10116	White	25" x 25"
10116-8	White	25-7/8" x 25-7/8"
10117	White	26" x 26"
10118	White	27" x 27"
10118-3	White	27-3/8" x 27-3/8"
10118-5	White	27-1/2" x 27-1/2"
10118-6	White	27-5/8" x 27-5/8"

Item#	Color	Size (A x B)
10118-75	White	27-3/4" x 27-3/4"
10119	White	28" x 28"
101192	White	30" x 30"
101195	White	33" x 33"
101195-5	White	33-1/2" x 33-1/2"
101196	White	34" x 34"
101196-5	White	34-1/2" x 34-1/2"
101198	White	36" x 36"
101198-3	White	36-3/8" x 36-3/8"
101199	White	37" x 37"
101202	White	39" x 39"
101202-5	White	39-1/2" x 39-1/2"
101203-1	White	41" x 41"
101203-1-6	White	41-5/8" x 41-5/8"
101203-1-8	White	41-7/8" x 41-7/8"
101204	White	42" x 42"
101204-5	White	42-1/2" x 42-1/2"
101205	White	44" x 44"
101207	White	48" x 48"
101208-1-0	White	51" x 51"
101208-1-1	White	51-1/8" x 51-1/8"
101209-1-8	White	53-7/8" x 53-7/8"
101210-4	White	54" x 54"
101210-1	White	54-1/8" x 54-1/8"
101210	Black	54-1/8" x 54-1/8"
10211-1	White	55" x 56-1/2"
10211-2	White	55-1/8" x 56-3/4"
101212	White	58" x 58"

INSULATED SHUTTER COVERS

Item#	Description
AIC24	27-5/8" x 27-5/8" cover for 24" Fan
AIC36	41-7/8'' X 41-7/8" cover For 36'' Fan
AIC48	53-7/8'' X 53-7/8" cover For 48'' Fan

SHUTTER ROD & LOUVERS

Item#	Description
SRODSS-1	Stainless Steel Shutter Rod
SBLADEW-4	Louvers 4" Wide x 20' Length

CLIP RETAINER SHUTTER

Item#	Description
HSH020	Clip Retainer Shutter

Tunnel Shutters

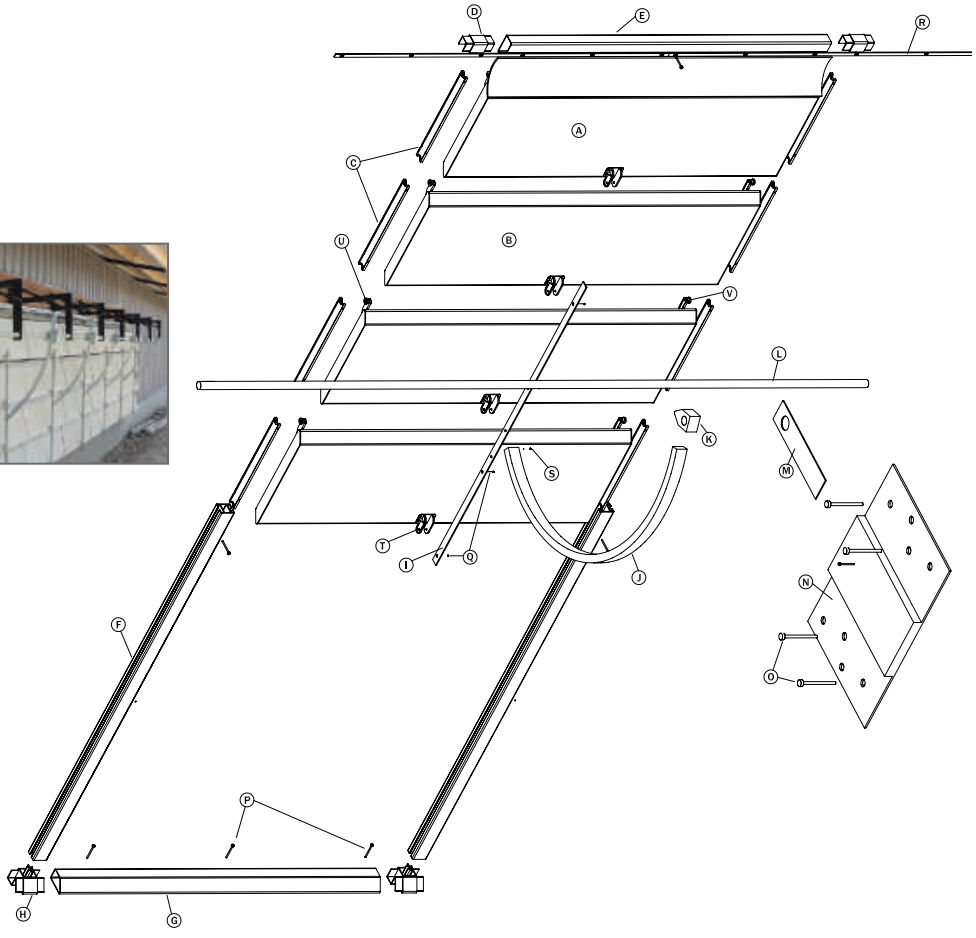

Key	Item #	Description
A)	-	Top Shutter with flap seal
B)	6120039K	Individual Shutter Kit
C)	6120037	Regular shutter Spacer
	6120031	Top Spacer (short)
D)	6120008	Top Coupler Vertical Rail
E)	6120029	Horizontal Rail
G)	6120029	Horizontal Rail
F)	6120015	Vertical Rail 4 ft.
	6120002	Vertical Rail 5 ft.
	6120011	Vertical Rail 6 ft.
H)	6120009	Bottom Coupler Vertical Rail
I)	6120034	Tie Bar 4 ft.
	6120026	Tie Bar 5 ft.
	6120035	Tie Bar 5 ft.
J)	6120027	Rack

Key	Item #	Description
K)	6120028	Pinion
M)	6120004	Pipe Bracket Doghouse
N)	6120004	Pipe Bracket Doghouse
R	6120032	Top Retainer Strip
J)	6120025	Tie Bar Bracket
U)	6120023	Shutter Hinge Left
V)	6120024	Shutter Hinge Left
Additional Parts		
	6120030	Top Seal
	6120021	Shutter End Cap
	6120003K	Pipe Kit (19.5 ft with bolt)
	6120012K	Universal Joint Kit
	DI6120040	Plasti Dip Clear 11 oz.
	6120005	Pipe Bracket Hanging - Ext 5' & 6'
	6120019	Pipe Bracket Hanging - Ext 4'

FAN SHADE

These cost effective and easily installed products block 95% of direct light from entering the house.

Item#	Description
FS64SB	Fan Shade 64" x 64" with 12" Short Brackets

BISON MODEL 016-101-0026 GEAR MOTOR

- 100 Series AC Parallel Shaft Gear Motor
- Torque 49 inch pounds; Over Hung lbs. = 230
- Rotation = Reversible; Junction Box Included
- TENV Enclosure, Keyed Shaft, Ball Bearings

⚠ WARNING:
This product can expose you to chemicals, including nickel, which is known to the State of California to cause cancer and birth defects or other reproductive harm. For more information, go to www.P65Warnings.ca.gov

Item#	HP	RPM	Frame (NEMA)	Voltage	F.L. Amps
K0161010026	1/20	63	34	115	.62

NEGATIVE PRESSURE VENT CONTROL

This controller opens and closes vents as required to maintain the building's static pressure within the defined range set the high and low limit pointers.

- Manual / Auto selection
- 120 V
- 3-wire connections
- Includes 25' of tubing.

Item #	Description
HS653	Negative Pressure Control

FAN SHAFT

Item #	Description
SH1-000C18KEYX6	1" x 6" Shaft, C1018 Trukey 1/4" x 1/8" Keyway
SH1-000C1450	1" x 14-1/2" Shaft, Trukey 1/4" x 1/8" Keyway
SHAFT1-1700	1" x 17" Shaft
SH1-000C18X4	1" x 4' Shaft Unkeyed
SHAFT1-1000	1" x 10" Shaft
SHAFT1-1000T	1" X 10" (1/4 x 1/8 x 10 Thru Keyed) Shaft
SHAFT1-1150	1" x 11-1/2" Belt Drive Shaft
SHAFT1-1150T	1" X 11.5" (1/4 x 1/8 x 11.5 Thru Keyed) Shaft
SHAFT1-1450T	1" X 14.5" (1/4 x 1/8 x 14.5 Thru Keyed) Shaft
SHAFT1-1563	1" x 15-9/16" Shaft
SHAFT1-1563T	1" X 15-9/16" (1/4 x 1/8 x 15-9/16 Thru Keyed) Shaft
SHAFT1-1575	1" X 15.75" Keyed Full Shaft
SHAFT1-1700T	1" X 17" (1/4 x 1/8 x 17 Thru Keyed) Shaft
SHAFT1-1800	1" x 18" Keyed Shaft
SHAFT1-1800T	1" X 18" (1/4 x 1/8 x 18 Thru Keyed) Shaft
SHAFT1-763T	1" X 7-5/8" (1/4 x 1/8 x 7-5/8 Thru Keyed) Shaft
SH0-750C18KEYX6	3/4" x 6' C1018 Trukey 3/16" x 1/8" Keyway
958869	Key 10MM x 8MM x 50MM
968558	Key M10MM x 8MM x 45MM
978978	Key M12MM x M8MM x 80MM

THERMALARM

Item#	Description
520190	Thermalarm III (normally closed)
520191	Thermalarm II (normally open)

STATIC PRESSURE CONTROL

Item#	Description
GSP-2	Static pressure control

DIGITAL THERMOMETER

Item#	Description
MVFMST-1/S	Digital Thermometer

PRE-WIRED THERMOSTAT

- Pre-wired w/20' cord
- Plugs into a regular outlet
- Controls any heater

Item#	Description
59598	w/20' cord
U02-2133	Cord only Piggy Back 18 Ga 20'

TEMPERATURE SENSORS

Item#	Description
HSPROBE-S	Probe 18'' Cord
HSPROBE	Probe 30' Cord

DIGITAL PROBE

Item#	Description
VF2004-1KLT	Digital probe for MST-1

GrowerSELECT® Insulated Actuated Bifold Inlets

Provides accurate control of incoming air to direct it across ceiling to reduce drafts at floor level.

#HSIN3000C-I
Airflow Performance Data (CFM)

Opening Width (In)	Static Pressure (In, H_2O)			
	0.05	0.1	0.125	0.15
1	300	450	500	550
2	650	950	1050	1150
3	950	1350	1550	1700
5	1400	1950	2200	2400
6	1750	2450	2750	3050
8	1950	2750	3100	3400
Fully Open	2250	3250	3600	3950

* Computer generated data

Rough opening: 25" x 27-1/2"

HSIN4900C-I
Airflow Performance Data (CFM)

Opening Width (In)	Static Pressure (In, H_2O)			
	0.05	0.1	0.15	0.2
1	600	850	1050	1250
2	1150	1650	2050	2400
5	2350	3350	4000	4300
6	2850	4050	5000	5750
8	3200	4500	5500	6350
Fully Open	3750	5350	6550	7600

* Computer generated data

Rough opening: 24-1/2" x 46-1/2"

Side Entry Cleat

Allows for fast and easy adjustment of the rope. Cleat retains the rope securely when adjustment is not necessary.

Latch Mount and Cable Guide

Side mounted latch does not get blocked while opening by ceiling obstructions. Latch shuts the inlet tightly and securely. Combination piece also serves as a guide for the rope that helps open/close the inlet.

Exterior Seal

Matching tongue and groove on door and frame eliminates gaps when inlets closes.

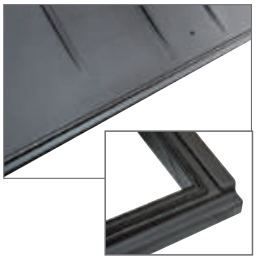

GrowerSELECT® Insulated Curved Door Sidewall Inlet

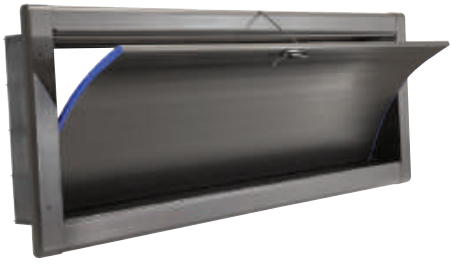

Airflow Performance Data (CFM)

Opening Width (In)	Static Pressure (In, H_2O)		
	0.05	0.1	0.15
1.5	200	400	550
3	550	850	1100
6	1200	1700	2000
11*	2150	3050	3700

* Computer generated data

- **Curved inlet door directs air to the ceiling for effective mixing.**
- **Foam insulated inlet door reduces condensation.**
- **Seals tightly to minimize heat loss and air infiltration**
- **Corrosion resistance plastic construction**

Item#	CFM	Rough Opening
HSIN3050SW	3050	13" x 44"
HSIN1700SW	1700	8" x 44"

Single Sidewall Inlet

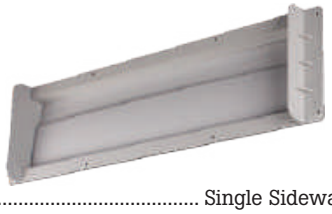

- 5-1/2" x 22-1/2"
- 430 cfm
- Self-adjusting inlet

#HSI200 ..... Single Sidewall Inlet

Plastic Vent Cover

#HS48X14 ..... 14" x 48"

Gravity Wall Inlet

- Fiberglass housing with foam filled plastic baffle
- Adjustable steel counterweight
- Rated at 3000 CFM
- Ideal for use with pre-heated hallways
- Rough opening 13-1/2" x 46-1/2"

#62990 ..... Gravity Wall Inlet

⚠ WARNING:
This product can expose you to chemicals, including nickel, which is known to the State of California to cause cancer and birth defects or other reproductive harm. For more information, go to www.P65Warnings.ca.gov

Replacement Parts

#59293 ..... Replacement weight
#59294 ..... Replacement bracket

⚠ WARNING:
This product can expose you to chemicals, including nickel, which is known to the State of California to cause cancer and birth defects or other reproductive harm. For more information, go to www.P65Warnings.ca.gov

#PAK3458

#PAK1041

FAN SHEAVES

Item#	Description
PAK3458	AK34, 5/8" bore
PAK1041	AK104, 1" bore
PAK3058	AK30, 5/8" bore
PAK4134	AK41, 3/4" bore

#6202240

#6202115

TORQUE NUTS

Item#	Description
HS903-1	1/2" torque nut
6202107	5/16" torque nut
6202115	5/8" torque nut
6202240	1" ID x 1.75" OD, Zinc

ROUND FAN COVER WITH BUNGEE CORDS

MORE SIZES AVAILABLE!

Item#	Description
FANCVR58BWX	58"
FANCVR60BWX	60"
FANCVR68BWX	68"

SPRING BELT TIGHTENER

Item#	Description
HS16-0040	Spring belt tightener 48" fan

BUSHING TAPER LOCK

Item#	Description
HS13-0003	for all belt drive props 1"

FAN BLADE

Item#	Description
H6403-6111	for Hired Hand 48" fan

POWER TWIST LINK BELT

Item#	Description
AFH2053	A section 1/2" for fans, 100' box
AFH2054	B section 5/8" for fans, 100' box

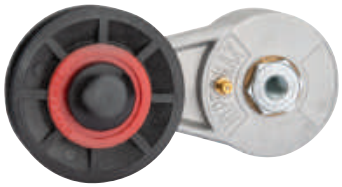

Tensioner Idler Pulley - Chore-Time

#HB2100..... Tensioner idler pulley assembly 3" w/zerk

Tensioner Idler Pulley - Chore-Time

#FT1875 ..... Tensioner idler assembly 5.5'' Arm 3" Diameter, no zerk (Fenner Drive)

Idler Pulley - Chore-Time

#VX3014.....Idler pulley kit 3" w/dust cap

Idler Pulley - Chore-Time

#FS0604ZF.....Idler pulley assembly 5.5" w/arm 3" Diameter w/zerk (Fenner Drives)

Idler Pulley - Munters/Aerotech

#AFH2406 ... Metal pulley 3" A section 3/8" B C.I. for idler pulley

Idler Pulley - Cumberland

#G91-0058 .....Idler Pulley 3" w/dust cap

Idler Pulley - Cumberland

#FS0581ZF ..... Idler pulley assembly 3" w/zerk (Fenner Drives)

Idler Pulley - Cumberland

#VX3004..... Idler pulley 3"

Idler Pulley - Hired-Hand

#B1146..... Idler Pulley 4"

Idler Pulley - Hired-Hand

#FS0605ZF..... Idler pulley assembly 4" assembly w/arm w/zerk(Fenner Drives)

Idler Pulley - Hired-Hand

#VX4004..... Idler Pulley 4"

Idler Pulley

#VX3012.....Idler pulley 3" SB002 Bushing 3/8" ID 1/2" Shoulder

Tensioner Assy - Windstorm and AirStorm

#HS903-3 .....With splash guard for belt drives except Windstorm 36"

Tensioner Assy - Windstorm 36"

#HS903-8.....1.7"

GroBelt DRIVE BELTS

- Built of WEAR RESISTANT high modulus compression rubber.
- Embedded with LOW STRETCH polyester fiber cable cords.
- Neoprene outer ply to PREVENT SLIPPAGE.

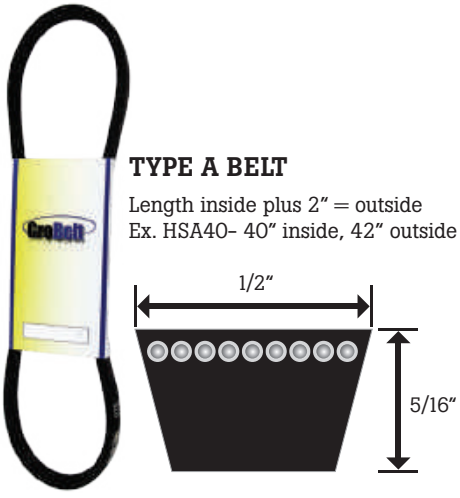

TYPE A BELT

Length inside plus 2" = outside
Ex. HSA40- 40" inside, 42" outside

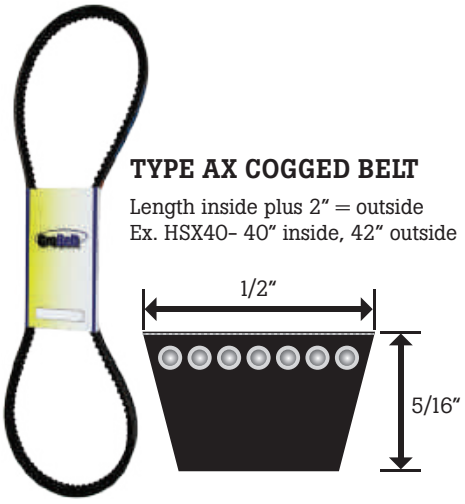

TYPE AX COGGED BELT

Length inside plus 2" = outside
Ex. HSX40- 40" inside, 42" outside

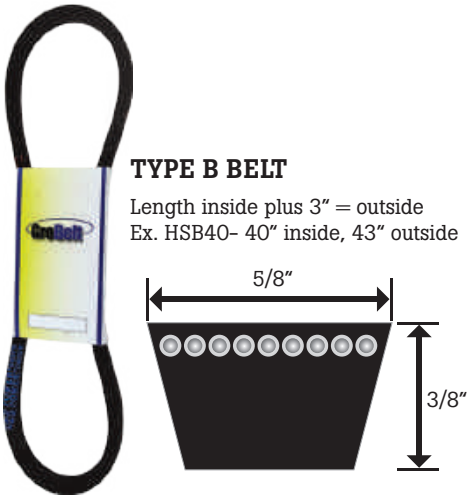

TYPE B BELT

Length inside plus 3" = outside
Ex. HSB40- 40" inside, 43" outside

Type A Belt

Item#	Description
HSA20	1/2" x 22" Standard
HSA21	1/2" x 23" Standard
HSA23	1/2" x 25" Standard
HSA24	1/2" x 26" Standard
HSA26	1/2" x 28" Standard
HSA27	1/2" x 29" Standard
HSA28	1/2" x 30" Standard
HSA29	1/2" x 31" Standard
HSA30	1/2" x 32" Standard
HSA31	1/2" x 33" Standard
HSA32	1/2" x 34" Standard
HSA33	1/2" x 35" Standard
HSA34	1/2" x 36" Standard
HSA35	1/2" x 37" Standard
HSA36	1/2" x 38" Standard
HSA37	1/2" x 39" Standard
HSA38	1/2" x 40" Standard
HSA39	1/2" x 41" Standard
HSA41	1/2" x 43" Standard
HSA42	1/2" x 44" Standard
HSA43	1/2" x 45" Standard

Type A Belt

Item#	Description
HSA44	1/2" x 46" Standard
HSA45	1/2" x 47" Standard
HSA46	1/2" x 48" Standard
HSA47K	1/2" x 49" Kevlar
HSA48	1/2" x 50" Standard
HSA49	1/2" x 51" Standard
HSA51	1/2" x 53" Standard
HSA53	1/2" x 55" Standard
HSA54K	1/2" x 56" Kevlar
HSA55	1/2" x 57" Standard
HSA56	1/2" x 58" Standard
HSA57	1/2" x 59" Standard
HSA58	1/2" x 60" Standard
HSA59	1/2" x 61" Standard
HSA61	1/2" x 63" Standard
HSA65	1/2" x 67" Standard
HSA71	1/2" x 73" Standard
HSA73	1/2" x 75" Standard
HSA75	1/2" x 77" Standard
HSA88	1/2" x 90" Standard

Type AX Cogged Belt

Item#	Description
HSAX31	1/2" x 33" Cogged
HSAX38	1/2" x 40" Cogged
HSAX39	1/2" x 41" Cogged
HSAX43	1/2" x 45" Cogged
HSAX46	1/2" x 48" Cogged
HSAX56	1/2" x 58" Cogged
HSAX58	1/2" x 60" Cogged
HSAX59	1/2" x 61" Cogged
HSAX60	1/2" x 62" Cogged
HSAX64	1/2" x 66" Cogged

Type B Belt

Item#	Description
HSB35	5/8" x 38" Standard
HSB38	5/8" x 41" Standard
HSB30	5/8" x 33" Standard
HSB83	5/8" x 86" Standard
HSB97	5/8" x 100" Standard

Replacing fan belts yearly maintains maximum performance.

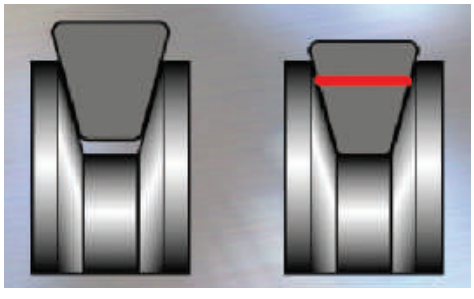

Worn belts will ride below the top edge or completely bottom out on the pulley, as shown by the red line.

GrowerSELECT VARIABLE SPEED FAN MOTORS

- Removable plastic motor cap protects internal capacitor and provides access to wiring terminals.
- Water slinger protects moisture from being forced past the double bearings while fan is operating.
- Full 56 Frame motors with 5/8" interior shaft and double sealed ball bearings.
- You don't have to sacrifice performance to save money!

2 YEARS WARRANTY 2 YEARS

⚠ WARNING: This product can expose you to chemicals, including nickel, which is known to the State of California to cause cancer and birth defects or other reproductive harm. For more information, go to www.P65Warnings.ca.gov

Item#	Hp	RPM	Voltage	*AP OEM Part #	Fan Size
#HS9028KIT†	1/6	3300	115/230	15-0145	8" & 10"
#HS9007	1/4	1725	115/230	15-0109	14"
#HS9008	1/3	1725	115/230	15-0110	18"
#HS9006A	1/3	1075	115/230	15-0105	24"

†Single Speed • *Use of Original Equipment Manufacturer part numbers is for reference only.

GrowerSELECT REPLACEMENT MOTORS FOR MUNTERS / AEROTECH FANS

2 YEARS WARRANTY 2 YEARS

⚠ WARNING: This product can expose you to chemicals, including nickel, which is known to the State of California to cause cancer and birth defects or other reproductive harm. For more information, go to www.P65Warnings.ca.gov

Item#	Hp	RPM	Voltage	*Aerotech OEM #	Fan Size
#HS9031†	1/6	3250	120/240	FM1038	9"
#HS9003	1/8	1625	120/240	FM1010	14"
#HS9002	1/3	1625	120/240	FM1009	18"
#HS9001A	1/3	1075	120/240	FM1008	24"

†Single Speed • *Use of Original Equipment Manufacturer part numbers is for reference only.

GrowerSELECT SINGLE SPEED FAN MOTORS

- TEAO Motors
- Permanently lubricated ball bearing
- Dual start/run capacitors
- 5/8" shaft
- Auto overload

2 YEARS WARRANTY 2 YEARS

⚠ WARNING: This product can expose you to chemicals, including nickel, which is known to the State of California to cause cancer and birth defects or other reproductive harm. For more information, go to www.P65Warnings.ca.gov

Item#	RPM	Hp	Frame	Voltage	Amps	Use
#HS9005A	850	1/2	48	115/230	6.6/3.3	Direct Drive, 36"
#HS9015A	1725	1/2	56	115/208-230	5.3/2.6-2.6	Belt Drive, 36"
#HS9010A	1725	1	56	115/208-230	11.2/6.0-5.6	Belt Drive, 48"-50"
#HS9000	1725	1	56	115/208-230	8.6/4.9/4.3	Belt Drive, 48"-50" (High S.F. 1.4 Motor**)
#HS9019A	1725	1-1/2	56	115/208-230	12.8/7.0/6.4	Belt Drive, 52"-54"
#HS9014C	1725	1-1/2	56	115/208-230	10.8/5.4	Belt Drive, 52"-54" (High S.F. 1.5 Motor**)

*HS9000 = High S.F. (Service Factor) 1.4 Motor *HS9014A = High S.F. (Service Factor) 1.5 Motor

3 PHASE FAN MOTORS

- TEAO
- 5/8" Shaft

#L117745

#HS9301 (Marathon)

⚠ WARNING: This product can expose you to chemicals, including nickel, which is known to the State of California to cause cancer and birth defects or other reproductive harm. For more information, go to www.P65Warnings.ca.gov

ITEM#	HP	RPM	FRAME	VOLTAGE	F.L. AMPS	SPEED	PHASE	WT.	USE
HS9302	1/3	1140	48Z	208-230/460	1.5/0.7	Single	3	14	Direct Drive Variable
HS9330	1/2	1725	56Z	208-230/460	1.6/0.8	Variable	3	23	Belt Drive Fan
HS9385-VFD	1	1725	56	200-230/460	3.0	Variable	3	33	Most Belt Driven 48"-52" Fans using Inverters
LE119198	1-1/2	1725	56	200-230/460	3.0	Variable	3	33	Most Belt Driven 48"-57" Fans using Inverters
HS9301 (Marathon)	1	1725	56	200-230/460	3.0	Variable	3	33	Most Belt Drive 48"-52" Fans using Inverters
HS9384-VFD	1	850	56C	208-230/460	5.0/2.5	Single	3	43	Direct Drive Box Fan
HS9331	1	1725	56Z	208-230/460	3.6/1.8	Variable	3	23	Belt Drive Fan
HS9378-VFD	2	1725	56	200-230/460	6.0/3.0	Single	3	37	Belt Drive Fan

STIR FAN MOTORS

#HS9303

#VR12A

⚠ WARNING: This product can expose you to chemicals, including nickel, which is known to the State of California to cause cancer and birth defects or other reproductive harm. For more information, go to www.P65Warnings.ca.gov

ITEM#	HP	RPM	FRAME	VOLTAGE	F.L. AMPS	SHAFT SIZE	PHASE	USE
VR12A	1/2	825	48Y	115/220	7.0/3.5	5/8"	1	JD Box/Pit Fan and 36" Windstorm
HS9303	1/2	825/715	48Y	230/460	2.4/1.2	5/8"	3	JD Box/Pit Fan

H2PAD

Manufactured of quality cellulose paper, oven-cured with acrylic polymer glue and fungicides.

#H2-64E.....H2Pad 6" x 12" x 48" Pro Tec Edge 15/45 Flute
#H2-65E.....H2Pad 6" x 12" x 60" Pro Tec Edge 15/45 Flute
#H2-66E.....H2Pad 6" x 12" x 72" Pro Tec Edge 15/45 Flute

Production of H2PAD

begins by selecting heavyweight Saturation Grade Kraft Paper designed for high water absorption rates. This specialty Kraft is also formulated for consistent resin pick-up; a crucial step to ensure proper resin impregnation during manufacturing.

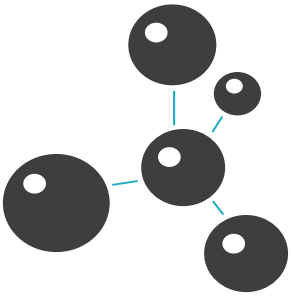

A proprietary resin

contains critical formulation of acrylic polymer glues, melamine additive for fire resistance, and fungicide additive. A special viscosity additive ensures even application on each sheet.

Triple Curing Process

The first oven bakes the resin coating on the paper. The second oven cures each sheet individually after corrugating and before pressing to ensure consistent glue contact points. A third oven cures each media block for three hours before cutting and sanding.

Constant Monitoring

Throughout the manufacturing process, technicians constantly monitor the moisture content of the paper. Consistent moisture content is critical to proper adhesion of glues and the curing process.

3/4" ProTec Edging

increases pad life by protecting against UV light and mechanical damage when cleaning. Helps to prevent the buildup of algae and minerals on the air entry side of the H2PAD. Special wetting additive promotes even water distribution by reducing the amount water collecting on the pad surface.

PAD RETAINER CLIP

Stainless steel wire retainers used to hold cool cell pads in place. Pad retainers add additional rigidity to the center of pads to help maintain straightness over time. Retainer Clips should be used to stabilize pads that are more than five feet high and and when pads are stacked.

#HS756.....Cool Cell Retainer Clip

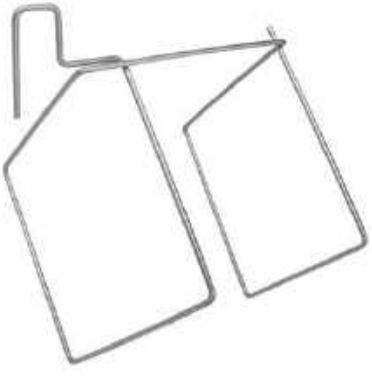

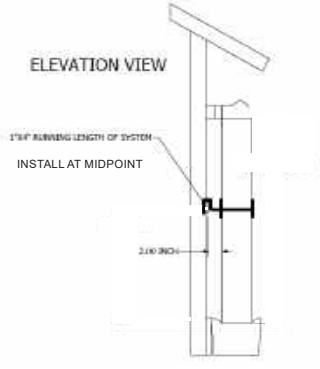

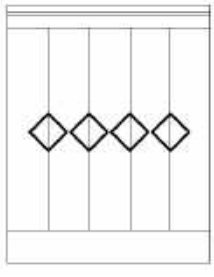

End Cap

#HSES-01 .... End Cap For Trough HSI Evap Systems
#HSES-02 ..... End Cap With Nipple

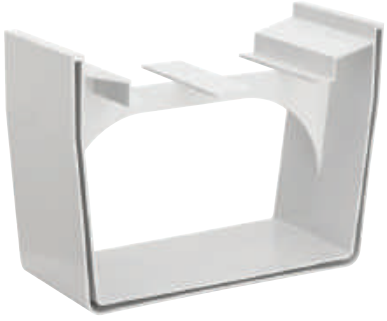

Splice Coupler

#HSES-03 ..... for Trough HSI Evap Systems

8" Rubber Cap

#HSES-RA14 ..... 8" Cap Rubber Round Style Trough

10" PVC Cap

#5274670 .... 10" Cap PVC Round Cool Cell System

Rubber Cap with Clamp

#5274611 .... 8.16" Cap Rubber For Reeves Cool Cell

Rubber Cap

#AEC1094 ..... 8" Rubber Cap for Munters Cool Cell

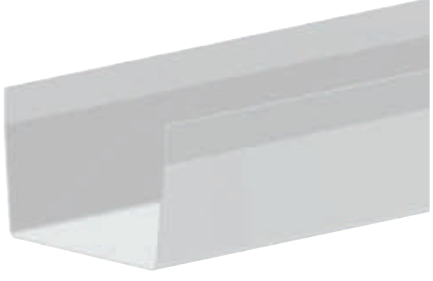

Trough, Square

#HSES-04 ..... 10' HSI Evap Systems
#HSES-05 ..... 5' HSI Evap Systems

Trough, Round

#HSES - RA9 ..... 8" x 10'6' includes bell end

Trough Cement

#HSES-34 ..... Trough Cement, 10.3 oz tube

Trough Support Bracket

#HSES-27 ..... for HSI Evap Systems

Trough Support Bracket Cover

#HSES-52 ..... 16ga 304 Stainless Steel

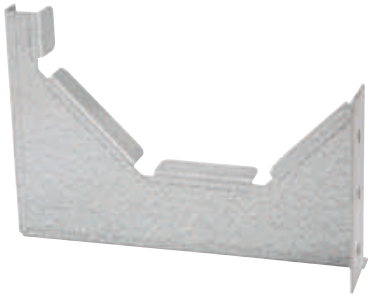

Round Trough Support Bracket

#HSES-RA5 ..... Round Style 8"

Little GIANT Submersible Pumps

Little GIANT offers a full line of submersible pumps for all evaporative cooling systems. These pumps are engineered to provide the highest efficiency and dependability for extended and continuous use.

⚠ WARNING:
This product can expose you to chemicals, including nickel, which is known to the State of California to cause cancer and birth defects or other reproductive harm. For more information, go to www.P65Warnings.ca.gov

- Model#: 9EH-CIA-RFS
- 4/10 Hp shaded pole motor
- 70 GPM @ 5' head
- Cord Length: 20'
- 115 V; Amps: 13 ; Watts: 1000
- (H) 9.3 x (W) 9" x (L) 11.7"
- Switch: Automatic

#9EN-CIA-RF ..... 230 V (9EH-CIA-RFS)

- Model#: 10-CIA
- 1/2 Hp split phase motor
- 83 GPM @ 5' head
- Cord Length: 10'
- 115 V; Amps: 11; Watts: 1100
- (H) 10.3" x (W) 9.4" x (L) 9.3"
- Switch: Automatic

#61088 ..... 115 V automatic (10-CIA)

- Model#: 6-CIA
- 1/3 Hp split phase motor
- 46 GPM @ 5' head
- Cord Length: 8'
- 115 V; Amps: 9; Watts: 720
- (H) 6" x (W) 8.5" x (L) 9.5"
- Switch: Automatic

#506158 ..... 115 V automatic (6-CIA)

- Model#: 6-CIM-R
- 1/3 Hp shaded pole motor
- 46 GPM @ 5' head
- Cord Length: 10'
- 115 V; Amps: 9; Watts: 720
- (H) 7.25" x (W) 7.25" x (L) 9.5"
- Switch: Manual

#506271 ..... 115 V manual (6-CIM-R)

- Model#: 6EC-CIA-SFS
- 1/3 hp motor
- 53 GPM @ 5' head
- Cord Length: 10'
- 115 V; Amps: 14.5; Watts: 600
- (H) 11.28" x (W) 8.48" x (L) 10.66"
- Switch: Automatic Snap Action Float Switch

#506807 ..... 115 V automatic (8-CIA)

- Model#: 8-CIM
- 4/10 Hp shaded pole motor
- 54 GPM @ 5' head
- Cord Length: 25'
- 115 V; Amps: 10; Watts: 830
- (H) 6" x (W) 8.5" x (L) 9.5"
- Switch: Manual

#508058 ..... 115 V manual (8-CIM)

- Model # 9EC-CIM
- 4/10 Hp motor
- 70 GPM @ 5' head
- Cord Length: 20'
- 115V; Amps: 7.5; Watts: 800
- (H) 11.0" x (W) 8.9" x (L) 8.4"
- Switch: Manual
- 1-1/2" Discharge port

#509805 ..... 115 V manual (9EC-CIM)

Switch & Diaphragm Rebuild Kit

#610891 ..... for 506158 pump

Gould Submersible HI Capacity Pumps

- 304 Stainless steel body
- 1.5" NPT
- 110 GPM
- 1/2 Hp

#1DW51C0EA 115V
#1DW51C1EA 230V
#9L122 ..... Capacitor for 1DW51C0EA
#9L113 ..... Capacitor for 1DW51C1EA

Gould Submersible Pumps

- 304 Stainless steel body
- 1.5" NPT
- 57 GPM

#LSP0311 ..... 1/3 Hp, 115V
#LSP0711F ..... 3/4 Hp, 115V
#LSP0712F ..... 3/4 Hp, 230V
#9L118 ..... Capacitor for LSP0711F
#9L115 ..... Capacitor for LSP0712F

Liberty Submersible Pump

- Model #257
- 1/3 Hp motor
- 45 GPM @ 5' head
- Cord length : 10'
- 120 V, 5.2 amps running, 8 amp start
- Auto vertical float switch
- Cast body w/ Epoxy powder coat finish

#61257 ..... 120V, Auto

Sump or Jet Pump

Your choice of Jet Pump or Submersible Pump with Sump Tank.

Less Pad Streaking

Increased water flow directed to pad front. Open top design for quick visual inspection. Aluminum pad retainers held with user-friendly Tri-Knob fasteners.

Improved Drainage

Increased open area of trough cover quickly drains water away from pad bottoms to extend pad life.

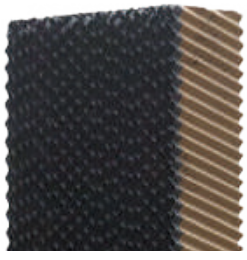

Heavy H2Pad

Coated with ProTec to protect against UV and mechanical damage.

See It In Action!
YouTube:
Hog Slat Evap Systems

Stronger Brackets

4" Wide Brackets prevent damage to trough and double leg supports eliminate twisting and sagging.

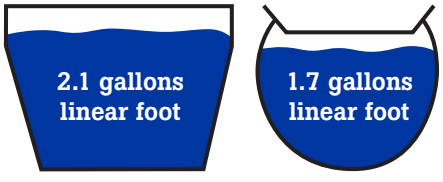

Greater Trough Capacity

Square trough increases water reservoir by over 24% over the round trough.

Extension Kit for Round Pipe Cool Cell Systems

10' Add-on Kit for Round Style 8" Trough Evaporative Cooling System

Includes trough, cover cover, sprayer, deflector, pad retainer and 8" trough.
Does not include pad or end panel.

#HSES-RA10.....Extension Kit

Submersible Cool Cell Pump

Pumps typically used for cool cell systems are adapted from other industries; waste water, sump pumps, etc. They are designed with a higher head pressure and low volume to lift water as high as 35'.

We went to one of America's leading pump manufacturers with a request to build a pump specifically designed for cool cell systems. This pump features a re-designed VORTEX IMPELLER resulting in a unit with a LOWER HEAD PRESSURE with HIGHER VOLUME. This combination allows our pump to service a longer cool cell run.

Get 3/4 Hp Performance from a 1/2 Hp Pump!

The special impeller allows the use of a 1/2 Hp motor instead of a 3/4 Hp motor. Electrical usage is decreased by up to 25%.

Rugged Features for a Long Lasting Pump:

- Oil-filled motor
- Epoxy coated, cast iron housing
- 2" discharge with 1-1/2" bushing to adapt to most systems
- 2" bottom suction inlet
- 9' waterproof power cord
- Silicon carbide seal
- 115 / 230 Volt- 5.5/2/7 amps
- 15.87" high x 9.5" wide

#H2P-115S ..... 1/2 Hp submersible pump, 115 V
#H2P-230S ..... 1/2 Hp submersible pump, 230 V

⚠ WARNING:
This product can expose you to chemicals, including nickel, which is known to the State of California to cause cancer and birth defects or other reproductive harm. For more information, go to www.P65Warnings.ca.gov

Jet Pump

The Compact Jet Pump delivers outstanding performance. Efficient design minimizes friction and turbulence reducing power consumption.

Self-priming pump design protects internal components from wear.

Strainer basket features a **Transparent Lid** for easy inspection. Larger capacity extends time between clean out. Easy access drain plug for service and winterizing.

Features Include:

- Available as 115 or 230 volt models
- Includes 9 foot power cord
- 1-1/2" discharge pipe
- Open drip proof motor

#H2P-120JA ..... 3/4 Hp Jet Pump, 120 V
#H2P-240J ..... 3/4 Hp Jet Pump, 240 V

⚠ WARNING:
This product can expose you to chemicals, including nickel, which is known to the State of California to cause cancer and birth defects or other reproductive harm. For more information, go to www.P65Warnings.ca.gov

#HS9029

#HS9079

Jet Pump Motor

US Motors® 3/4 HP replacement motor for Hog Slat and Hired Hand Mega Cool non-submersible jet pumps. Motor is encased in drip-proof enclosure. 48Y frame.
1 year warranty.

Part#	Voltage	Amps	Hired-Hands
#HS9029	208-230	4.1-3.7	1062-5032
#HS9079	115/110	7.2/10.3	

Wet End Pump

Hi Flo 3/4 HP wet end pump for evaporative jet pump

#H2P-001 ..... Wet End for Jet Pump

Leaf Trap

6" diameter leaf trap for Jet Pump.
- 1-1/2" inlet
- 2" outlet

#H2P-002 ..... Leaf Trap

PVC Union

PVC pump union fitting with o-ring and gasket. Slip.

#H2P-003 ..... 1-1/2" - Jet Pump
#H2P-004 ..... 2" - Submersible Pump

Powerful screw machine accurately controls curtains, inlets, and tunnel doors.

Accurately control curtains, inlets and tunnel doors with the GrowerSELECT Curtain Machine. Innovative features such as easy mounting, simple servicing, localized control, double limit switches and more will help keep you up and running with more money in your pocket. An upgraded plastic enclosure at the bottom of the cabinet provides protection for switches and electrical connections from moisture and corrosive environments.

Choose from units 24", 36" or 48" of travel to accurately control curtains, inlets and tunnel doors.

Item#	Description
HS583E-2415	24" travel, 15 RPM, cable system
HS583E-2430	24" travel, 30 RPM, cable system
HS583E-2460	24" travel, 60 RPM, cable system
HS583E-2415S	24" travel, 15 RPM, sprocket drive
HS583E-2430S	24" travel, 30 RPM, sprocket drive
HS583E-3615	36" travel, 15 RPM, cable system
HS583E-3630	36" travel, 30 RPM, cable system
HS583E-3660	36" travel, 60 RPM, cable system
HS583E-3630S	36" travel, 30 RPM, sprocket drive
HS583E-4830	48" travel, 30 RPM, cable system
HS583E-4860	48" travel, 60 RPM, cable system
HS583E-4830S	48" travel, 30 RPM, sprocket drive

⚠ WARNING: This product can expose you to chemicals, including nickel, which is known to the State of California to cause cancer and birth defects or other reproductive harm. For more information, go to www.P65Warnings.ca.gov

MULTI-CURTAIN MACHINE ISOLATOR #HS766

Allows up to 4 curtain machines, linear actuators or other climate management equipment to be controlled in unison by a single input signal. Each output is an isolated dry contact SPDT relay output allowing a variety of connection possibilities. 120V control signal with 5 amp contact rating.

LINEAR VENT ACTUATOR

Hog Slat's 24" Linear Actuator is designed to be used with automatic ventilation controls. Bi-directional control with a built-in potentiometer feedback for position sensing of inlets with adjustable limit switches. Clamped extension boots and superior motor seals offer improved protection of interior components from dust and water. Includes terminal connection enclosure. Hog Slat's linear actuator has an IP Code (or International Protection Rating) of 65 versus competitive brand's rating of only 53. 50 inlet capacity with a 1:1 ratio. 800 pound max load at a 1:1 ratio.

*Shown with optional mounting bracket **HS667-01KIT**

Item#	Voltage	Travel/Sec.	Housing Color
HS667-24	120	1/4"	Blue
HS667-24-240	240	1/4"	Blue
HS667B-24	120	5/64"	Black

#HS667-01KIT .....Optional 12 ga. galvanized mounting bracket, 10.22" x 51" w/ hdwr

⚠ WARNING: This product can expose you to chemicals, including nickel, which is known to the State of California to cause cancer and birth defects or other reproductive harm. For more information, go to www.P65Warnings.ca.gov

ACME SCREW • 36"

Item#	Description
HS583-11A36B	Acme Screw

⚠ WARNING: This product can expose you to chemicals, including nickel, which is known to the State of California to cause cancer and birth defects or other reproductive harm. For more information, go to www.P65Warnings.ca.gov

RAISE-OFF-LOWER SWITCH

• Prev. #G1775

Item#	Description
EL1001	Raise-Off-Lower Switch

⚠ WARNING: This product can expose you to chemicals, including nickel, which is known to the State of California to cause cancer and birth defects or other reproductive harm. For more information, go to www.P65Warnings.ca.gov

TOGGLE SWITCH

• DPDT, 10 Amp, 250 V, 2 Position

Item#	Description
EL1005	Toggle Switch

⚠ WARNING: This product can expose you to chemicals, including nickel, which is known to the State of California to cause cancer and birth defects or other reproductive harm. For more information, go to www.P65Warnings.ca.gov

ACETAL LOAD NUT

Item#	Description
HS583-8-2A	Acetal Load Nut

BEARING FLANGE

• 1" I.D. 3-piece

Item#	Description
HS583-42	Bearing Flange

⚠ WARNING: This product can expose you to chemicals, including nickel, which is known to the State of California to cause cancer and birth defects or other reproductive harm. For more information, go to www.P65Warnings.ca.gov

SNAP ACTION ROLLER SWITCH

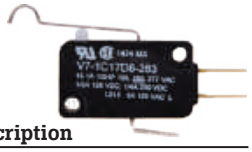

• 15 Amp

Item#	Description
EL1135	Snap Action Roller Switch

⚠ WARNING: This product can expose you to chemicals, including nickel, which is known to the State of California to cause cancer and birth defects or other reproductive harm. For more information, go to www.P65Warnings.ca.gov

GEAR MOTOR

• 115 V, 60 Hz, 1/8 HP
• 30 RPM
• For new style machine, door opens on hinge

Item#	Description
HS9050	Gear Motor

⚠ WARNING: This product can expose you to chemicals, including nickel, which is known to the State of California to cause cancer and birth defects or other reproductive harm. For more information, go to www.P65Warnings.ca.gov

*Use of Original Manufacturer's part numbers is for reference only

FAN BLADE

- Adjustable on/off run time
- Automatic control with manual override
- Remote sensor

Item#	Description
GTC1-NV	Natural vent controller

⚠ WARNING:
This product can expose you to chemicals, including nickel, which is known to the State of California to cause cancer and birth defects or other reproductive harm. For more information, go to www.P65Warnings.ca.gov

GEAR MOTOR

- Comes with block and hardware
- 30 RPM
- 110V

Item#	Description
G53-0230	w/ block and hardware

⚠ WARNING:
This product can expose you to chemicals, including nickel, which is known to the State of California to cause cancer and birth defects or other reproductive harm. For more information, go to www.P65Warnings.ca.gov

CURTAIN CONTROLLERS

The newly-designed curtain controller is a screwdriven automated curtain machine with an 1/8 Hp, 115 vac, 60 Hz motor in either 15, 30 or 60 RPM. Multidirectional, frame-mounted, head pulleys and latch out assembly are standard on all machines. Thermostat controls, electronic controls and extra bracket kits are sold separately. Comes with a 3,000-lb. lift capacity.

Item#	Description
GCC3615	5 RPM, 36" travel
GCC3630	30 RPM, 36" travel
GCC3660	60 RPM, 36" travel
GSPRKT3630	30 RPM, 36" travel w/sprocket

⚠ WARNING:
This product can expose you to chemicals, including nickel, which is known to the State of California to cause cancer and birth defects or other reproductive harm. For more information, go to www.P65Warnings.ca.gov

BALDOR GEAR MOTOR

Item#	Description
G53-0130BA	30 RPM 115V

⚠ WARNING:
This product can expose you to chemicals, including nickel, which is known to the State of California to cause cancer and birth defects or other reproductive harm. For more information, go to www.P65Warnings.ca.gov

BEARING

- 1" pillow lock bearing, locking collar included

Item#	Description
16G	Bearing, Prev.# G16-0076

⚠ WARNING:
This product can expose you to chemicals, including nickel, which is known to the State of California to cause cancer and birth defects or other reproductive harm. For more information, go to www.P65Warnings.ca.gov

TOP COUPLER

Item#	Description
G52-0330	Top Drive Coupler w/ welded nut

⚠ WARNING:
This product can expose you to chemicals, including nickel, which is known to the State of California to cause cancer and birth defects or other reproductive harm. For more information, go to www.P65Warnings.ca.gov

BOTTOM COUPLER

Item#	Description
LOV38146	Lower Drive Coupler w/ lock collar

⚠ WARNING:
This product can expose you to chemicals, including nickel, which is known to the State of California to cause cancer and birth defects or other reproductive harm. For more information, go to www.P65Warnings.ca.gov

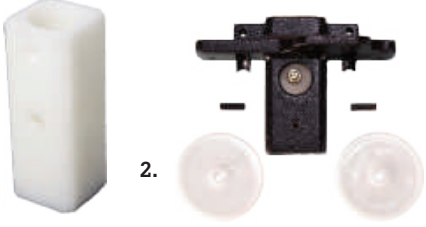

DRIVE BLOCK

Item#	Description
1) HS631	Plastic Insert, OEM# 52-0275
2) G52-0276	Drive Block Assy w/ side wheels

⚠ WARNING:
This product can expose you to chemicals, including nickel, which is known to the State of California to cause cancer and birth defects or other reproductive harm. For more information, go to www.P65Warnings.ca.gov

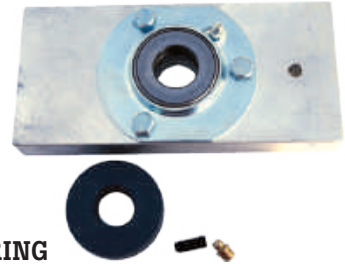

BEARING

Item#	Description
GAC52-0174	Thrust bearing w/ support

⚠ WARNING:
This product can expose you to chemicals, including nickel, which is known to the State of California to cause cancer and birth defects or other reproductive harm. For more information, go to www.P65Warnings.ca.gov

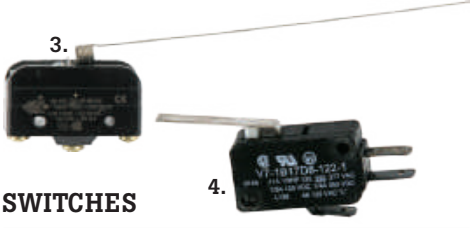

SWITCHES

Item#	Description
3) #EL1126	Whisker switch
4) #EL1041	Limit switch

⚠ WARNING:
This product can expose you to chemicals, including nickel, which is known to the State of California to cause cancer and birth defects or other reproductive harm. For more information, go to www.P65Warnings.ca.gov

SPIDER GEAR

Item#	Description
HS613	Hytrel spider gear

DRIVE SCREW

Item#	Description
G50-0056	36" travel drive screw

⚠ WARNING:
This product can expose you to chemicals, including nickel, which is known to the State of California to cause cancer and birth defects or other reproductive harm. For more information, go to www.P65Warnings.ca.gov

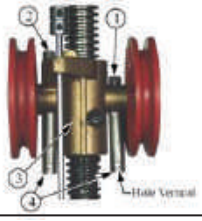

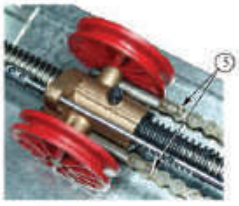

Item #	Description
1) C5083-8	1/4-20 x 1.50 Socked HD Cap Screw
2) 23212	1/4-20 x 2.25 Socked HD Cap Screw
3) C41957	Brass Nut
4) AGL44417	Chain Connecting Rod
5) AGL20017	Connecting Link

⚠ WARNING: This product can expose you to chemicals, including nickel, which is known to the State of California to cause cancer and birth defects or other reproductive harm. For more information, go to www.P65Warnings.ca.gov

GrowerSELECT

MOTOR

Item#	Description
HS9042	1/3 Hp, 1625/1425 RPM, 208-230/ 220-240 V, Replaces C36375

⚠ WARNING: This product can expose you to chemicals, including nickel, which is known to the State of California to cause cancer and birth defects or other reproductive harm. For more information, go to www.P65Warnings.ca.gov

CHORE-TIME GEAR BOX

Item#	Description
C3261-15	Chore-Time Gear Box

⚠ WARNING: This product can expose you to chemicals, including nickel, which is known to the State of California to cause cancer and birth defects or other reproductive harm. For more information, go to www.P65Warnings.ca.gov

CHORE-TIME SWITCH ASSEMBLY

Item#	Description
C38904	Chore-Time Switch
EL1056	SPDT switch replaces OEM# 46324

GrowerSELECT

SOX SPIDER SPACER

Item#	Description
LOV10621	C3633

CHORE-TIME THRUST BEARING BRACKET

Item#	Description
C35566	Chore-Time Thrust Bearing Bracket

⚠ WARNING: This product can expose you to chemicals, including nickel, which is known to the State of California to cause cancer and birth defects or other reproductive harm. For more information, go to www.P65Warnings.ca.gov

CHORE-TIME PULLEY WHEEL

Item#	Description
C41540	Chore-Time Pulley Wheel

MACHINED FLEXIBLE COUPLING

Item#	Description
C35944	Machined Flexible Coupling

⚠ WARNING: This product can expose you to chemicals, including nickel, which is known to the State of California to cause cancer and birth defects or other reproductive harm. For more information, go to www.P65Warnings.ca.gov

GrowerSELECT

PINION

Item#	Description
HSP05	Chore-Time OEM# 3429

⚠ WARNING: This product can expose you to chemicals, including nickel, which is known to the State of California to cause cancer and birth defects or other reproductive harm. For more information, go to www.P65Warnings.ca.gov

CHORE-TIME DRIVE SCREW

Item#	Description
C35945-4	Chore-Time Drive Screw

⚠ WARNING: This product can expose you to chemicals, including nickel, which is known to the State of California to cause cancer and birth defects or other reproductive harm. For more information, go to www.P65Warnings.ca.gov

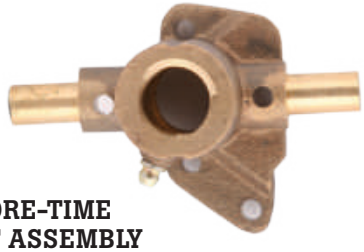

CHORE-TIME NUT ASSEMBLY

Item#	Description
C41957	Chore-Time Nut Assembly

⚠ WARNING: This product can expose you to chemicals, including nickel, which is known to the State of California to cause cancer and birth defects or other reproductive harm. For more information, go to www.P65Warnings.ca.gov

*Use of Original Manufacturer's part numbers is for reference only

HIRED HAND POWERTRAK™

- Modular construction for ease of service.
- 5,000 LB. capacity.
- Built-in head bracket with needle-bearing pulleys.
- Channel lock trak-drive system captures load block.
- 15% increase in load block support surface for greater life.
- Easy-adjust springcam limit switch system.
- Convenient hinged spring lock door is easily removed.
- Greater protection from the elements.

Item#	Description
H6602-0236	30 RPM, 36" travel
H6602-0244	60 RPM, 36" travel

⚠ WARNING:
This product can expose you to chemicals, including nickel, which is known to the State of California to cause cancer and birth defects or other reproductive harm. For more information, go to www.P65Warnings.ca.gov

GrowerSELECT

Replacement Load Nut Assembly

- Plastic insert
- Replaces Brass Load Nut OEM #6402-1254

Item#	Description
HS576	Load Nut Assembly

GrowerSELECT

Acetal Load Nut

Item#	Description
HS583-8-2A	Acetal Load Nut

GrowerSELECT

POWERTRAK™ LOAD NUT ASSEMBLY

Item#	Description
H6450-5049	Complete

⚠ WARNING:
This product can expose you to chemicals, including nickel, which is known to the State of California to cause cancer and birth defects or other reproductive harm. For more information, go to www.P65Warnings.ca.gov

GrowerSELECT

ALUMINUM LOAD BLOCK

Item#	Description
HS574	OEM part #0401-3560

⚠ WARNING:
This product can expose you to chemicals, including nickel, which is known to the State of California to cause cancer and birth defects or other reproductive harm. For more information, go to www.P65Warnings.ca.gov

WIRING HARNESS

Item#	Description
A) H6650-5024	Wiring harness
B) HS1902-0158	10' Wiring harness

TEMPERATURE SENSOR

- Replaces sensor for all Hired-Hand controls

Item#	Description
EL1087	Temperature sensor

GrowerSELECT

GEAR MOTOR

- For new style machine, door opens on hinge
- 115V, 60 Hz, 1/8 Hp

Item#	Description
HS9050	30 RPM OEM part #6650-0063
HS9052	16 RPM OEM part #6650-0062

⚠ WARNING:
This product can expose you to chemicals, including nickel, which is known to the State of California to cause cancer and birth defects or other reproductive harm. For more information, go to www.P65Warnings.ca.gov

GEAR MOTOR

- Bison - old style
- Door lifts off

Item#	Description
H6650-0602	30 RPM, 110V

⚠ WARNING:
This product can expose you to chemicals, including nickel, which is known to the State of California to cause cancer and birth defects or other reproductive harm. For more information, go to www.P65Warnings.ca.gov

GrowerSELECT

PLASTIC SPIDER COUPLING

Item#	Description
HS613	OEM part #1050-1365

POWERTRAK™ LIMIT SWITCH ASSEMBLY

Item#	Description
H6402-0125	9 wire, old style
H6450-0205	3 wire, new style

⚠ WARNING:
This product can expose you to chemicals, including nickel, which is known to the State of California to cause cancer and birth defects or other reproductive harm. For more information, go to www.P65Warnings.ca.gov

GrowerSELECT

5/8" LOVEJOY COUPLING

Item#	Description
LOV38146	OEM part #1047-1367

⚠ WARNING:
This product can expose you to chemicals, including nickel, which is known to the State of California to cause cancer and birth defects or other reproductive harm. For more information, go to www.P65Warnings.ca.gov

SWITCHES

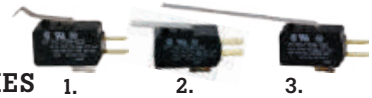

Item#	Description
1) EL1135	Limit switch
2) EL1042	Short arm upper safety switch
3) EL1039	Lower limit switch

⚠ WARNING:
This product can expose you to chemicals, including nickel, which is known to the State of California to cause cancer and birth defects or other reproductive harm. For more information, go to www.P65Warnings.ca.gov

HERCULITE®

Herculite sets the standard for high performance livestock curtains. Manufactured from flexible PVC composite fabric with polyester scrims for high tear strength. Herculite curtains are shrink and mildew resistant with excellent UV.

Item#	Net Size	Weight (oz.)	Color	Hems
61673BVA	66″	13	Frosty Clear	1
CVT136	68″	13	Frosty Clear	1
CVT137	80″	13	Frosty Clear	1
61673AVA	66″	9.5	Frosty Clear	1
61674	68″	9.5	White	1
61884-4	80″	13	Frosty Clear	1-1 pocket

POLYLITE®

Choose from Polylite® Super with 10x10 weave or the costing saving Poly Econo with a 9x9 weave. Also available in light blocking Black/ White Premium option.

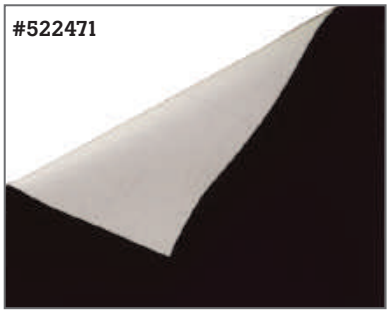

Item#	Net Size	Weight (oz.)	Color	Hems
• Polylite® Super				
61686-14	18″	4.2	Clear	1
61686-33	21″	4.2	Clear	1
61685	57″	4.2	Clear	1
61686	69″	4.2	Clear	1
61687	81″	4.2	Clear	1
61692	66″	4.2	Clear	2
61693	78″	4.2	Clear	2
61686-37	73″	4.2	Clear	1-2 pockets
• Polylite® Econco				
61686EC	69″	4.3	Clear	1
61687EC	81″	4.3	Clear	1
• Black/ White Premium				
BWP201	18″	6	B/W	1
616853	57″	6	B/W	1
616865	69″	6	B/W	1
BWP701	81″	6	B/W	1
• Specialty Curtains				
616763	84″	9.5	White - Vinyl	1 - 7 pockets
61673B3	94″	13	Clear Frosty Vinyl	1-2 pockets

BROODER CURTAINS

Manufactured from 10x10 Super-Poly

Custom sizes available!

Item#	Description
522412	52′, 1 zipper center house curtain
522413	52′, 2 zipper center house curtain
522411	42′, 1 zipper center house curtain
522414	42′, 2 zipper center house curtain
522494	12′ Curtain 10 x 10 (order to size / NO ZIPPERS)

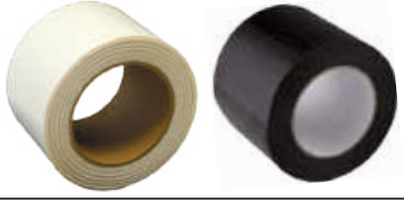

CURTAIN & TRIPLY CEILING REPAIR TAPE

Item#	Description
61571	Polylite curtain tape – 3″ x 60′ roll (clear)
61570	White curtain tape – 150′ Roll
61571BW	Polylite black & white 3″ x 60′ roll
844192	White tri ply repair tape (ceiling)
844193	Black tri ply repair tape (ceiling)
61571B	Curtain Tape Black 3″ x 60′
61570	Herculite White Curtain Tape – 150′ roll

GORILLA TAPE

Long lasting alternative to curtain tape.

Item#	Description
6035120	Black, 1.88″ x 35 yd. roll
6025002	White, 1.88″ x 30 yd. roll
6027003	Clear, 1.88″ x 27′ roll
6003001	Tough & Wide 3″ 30 yd. Roll Black
6010902	9 yd. Roll Camo

VINYL GLUE

- Super-Strong, waterproof, flexible bonds to vinyl coated and vinyl laminated fabrics
- Highly resistant to temperature and weather extremes
- Excellent for Patching and Sealing

Item#	Description
1003	8 oz. can
6719	1 qt. can

CPRO POLY PATCH

- Adhesive used to repair Polylite Curtains

Item#	Description
61719-V	1qt.

LOCTITE SPRAY ADHESIVE

Professional grade premium quality formulation for temperature resistant permanent bonds.

- Dries clear without yellowing
- Sets in 10 minutes, fully cured in 24 hours.
- Moisture and UV resistant.

Item#	Description
119241	Indoor/Outdoor 13.5oz

BONDSEAL SPRAY ADHESIVE

Multi-purpose glue with adjustable spray pattern.

Item#	Description
844195	Multi Purpose, 16 Oz

3M SCOTT WELD SPRAY ADHESIVE

Clear Hi-Strength adhesive with great bonding performance to multiple materials.

- 10-minute cure time
- Clear
- 180 psi shear strength

Item#	Description
6785091	#90 High Strength, 24oz

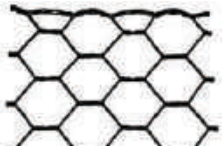

PLASTIC COATED POULTRY WIRE

- PVC galvanized 20 gauge wire
- 1-inch hex opening

Item#	Description
80580-1PW	PVC Coated 5′ x 150′ 3/4″ Hex
80580PW	PVC Coated 5′ x 150′
80581-1PW	PVC Coated 6′ x 150′ 3/4″ Hex
80581PW	PVC Coated 6′ x 150′

COUNTER WEIGHTS

Item#	Description
NC61752	25 lb. concrete
NC61751A	4-1/4″ diameter, 12 lbs, PVC
HS917-416	2″ solid metal, 17″ long, 15 lbs

CURTAIN BRACKETS

- Fits 66″ curtain
- Space every 4′
- 1/4″ x 1″ powder-coated metal

Item#	Description
8010790100	5′ 8″ curtain bracket painted
8010690100	7′ 3-1/2″ curtain bracket end wall
8010450100	4′6″ curtain bracket w/ 5″ angle, Painted

⚠ WARNING:
This product can expose you to chemicals, including nickel, which is known to the State of California to cause cancer and birth defects or other reproductive harm. For more information, go to www.P65Warnings.ca.gov

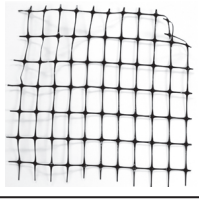

PLASTIC BIRD NETTING

- 330′/roll

Item#	Description
TNX60020409	6.5′ x 330′ Mesh Size .87″ x 1.38″ CintoFlex D
TNX60032409	6.5′ x 330′ Mesh Size .51″ x .59″ CintoFlex E
TNX60033409	4′ x 330′ Mesh Size .51″ x .59″ CintoFlex E
TNX60045409	5′ x 330′ Mesh Size .71″ x .98″ CintoFlex M
TNX60050409	6.5′ x 330′ Mesh Size .71″ x .98″ CintoFlex M

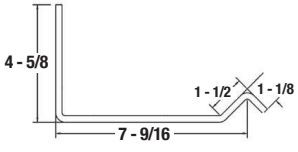

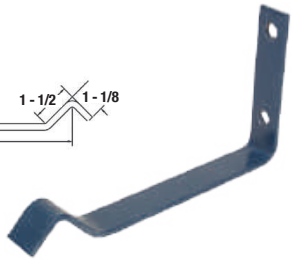

BRACKET FOR CURTAIN

- Extended

Item#	Description
8050680100	Backet for Curtain

SQUARE TACK NAIL

- Galvanized double dipped

Item#	Description
805421	1-1/2″ long, galv, square 64/ lb
855ARZ	1″ long, galv round head 74/ lb
805420	1-1/4″ long, plastic cap 286/lb
SWSSCN150	1-1/2″ metal cap
SWSSCN250	2-1/2″ metal cap

⚠ WARNING:
This product can expose you to chemicals, including nickel, which is known to the State of California to cause cancer and birth defects or other reproductive harm. For more information, go to www.P65Warnings.ca.gov

FENCE STAPLES

Item#	Description
84548G	2″ Fence Staple
80549	3/4″ Bird Wire Staples

⚠ WARNING:
This product can expose you to chemicals, including nickel, which is known to the State of California to cause cancer and birth defects or other reproductive harm. For more information, go to www.P65Warnings.ca.gov

BATTEN STRIPS

Use to fasten bottom of curtain to building, does not crack or rot like wood.

Item#	Description
84588	8′ x 1-3/4″, aluminum

BLACK POLY STRAPPING

- 1-3/4″ wide x 300′ roll

Item#	Description
61572	1-3/4″ x 300′ roll

RETAINER STRAP

- 2″ wide X 300′ roll

Item#	Description
TS102925	Retainer strap for curtain

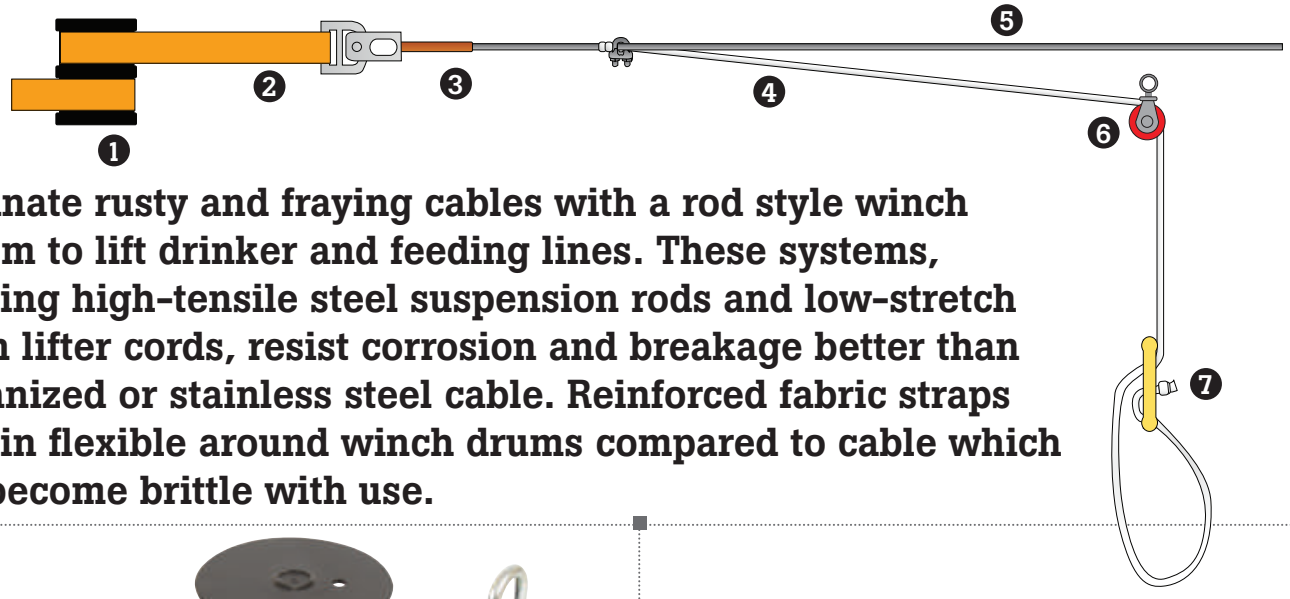

Eliminate rusty and fraying cables with a rod style winch system to lift drinker and feeding lines. These systems, utilizing high-tensile steel suspension rods and low-stretch nylon lifter cords, resist corrosion and breakage better than galvanized or stainless steel cable. Reinforced fabric straps remain flexible around winch drums compared to cable which can become brittle with use.

1) MANUAL WINDLIFT WINCH

#HSW03

- 5000 lb. capacity
- 90:1 ratio
- 2" diameter spilt reel
- Cable capacity: 64' of 3/16" cable
- Pre-drilled and tapped to accept strap kit
- Black epoxy finish

⚠ WARNING:
This product can expose you to chemicals, including nickel, which is known to the State of California to cause cancer and birth defects or other reproductive harm. For more information, go to www.P65Warnings.ca.gov

ELECTRIC CEILING WINCH WITH CONTROL

#24051

- 5000 lb. capacity
- Prewired 3/4 hp, 120V motor
- 2 ft/ min lift speed
- 2" diameter spilt reel
- 9' power cord
- 9' controller cord

2) STRAP KIT WITH BOLT

Item#	Description
#HSH055	5000 lb. (pair)
#HSH050	Strap Bolt only for HSH055
#HSH056	2000 lb. (pair)
#HSH051	Strap Bolt only for HSH056
#AMT251403	3' x 1/4" Sling rope w/thimbles
#AMT251425	25' x 1/4' Sling rope w/thimbles

⚠ WARNING:
This product can expose you to chemicals, including nickel, which is known to the State of California to cause cancer and birth defects or other reproductive harm. For more information, go to www.P65Warnings.ca.gov

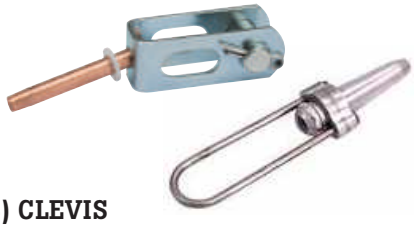

3) CLEVIS

#HSH053 ..... Dead-end clevis for 1/8" rod
#HSH054 ..... Dead-end clevis for 3/16" rod
#AMT17073 ..... Auto locking clevis for 1/8" rod
#AMT17072 ..... Auto locking clevis for 3/16" rod

⚠ WARNING:
This product can expose you to chemicals, including nickel, which is known to the State of California to cause cancer and birth defects or other reproductive harm. For more information, go to www.P65Warnings.ca.gov

4) GALVANIZED CABLE CLAMPS

Item#	Description
61732	1/8"
61733	3/16"

⚠ WARNING:
This product can expose you to chemicals, including nickel, which is known to the State of California to cause cancer and birth defects or other reproductive harm. For more information, go to www.P65Warnings.ca.gov

5) SUSPENSION ROD

Item#	Description
HSH17060-0390	1/8" x 390' Roll
HSH17060-0490	1/8" x 490' Roll
HSH17060-590	1/8" x 590' Roll
HSH17061-0390	3/16" x 390' Roll
HSH17061-0490	3/16" x 490' Roll
HSH17061-0590	3/16" x 590' Roll

6) PREMIUM DIAMOND BRAID CORD W/ WAX

Item#	Description
#61724D	1/8" x 1000'
#61724D-500	1/8" x 500'
#61725D	3/16" X 1000'
#61725D-500	3/16" X 500'

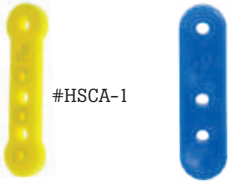

7) ROPE ADJUSTER

Item#	Description
HSCA-1	Feed Line Drop Cord Adjuster
HSCA-3	Heavy Duty Cord Adjuster

Split Reel Ceiling Winch

- 4000 lb. capacity
- Enclosed brake cover
- 41:1 gear ratio
- 2-1/2" diameter hub
- Cable capacity: 9/32" x 54' (27' per side)

* 4000 lb. capacity based on using 2 cables in opposite directions. Single cable capacity is 2000 lb.

#DL61811 .....Split Reel Ceiling Winch

⚠ WARNING:
This product can expose you to chemicals, including nickel, which is known to the State of California to cause cancer and birth defects or other reproductive harm. For more information, go to www.P65Warnings.ca.gov

Single Drum Ceiling Winch

- 3000 lb. capacity
- 45:1 gear ratio
- 3-3/4" diameter hub
- Cast construction, red finish

#AMT24030 .....Single Drum Ceiling Winch

⚠ WARNING:
This product can expose you to chemicals, including nickel, which is known to the State of California to cause cancer and birth defects or other reproductive harm. For more information, go to www.P65Warnings.ca.gov

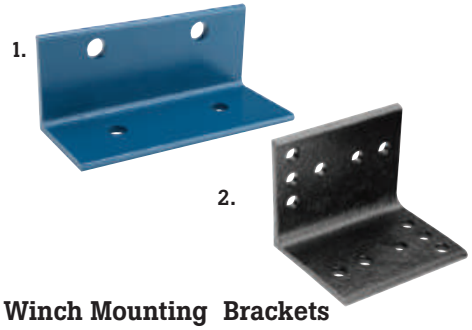

Winch Mounting Brackets

1) #61740 .....3" x 3" x 7" long, painted
2) #HSH074.....4" x 4" x 5" long, painted

⚠ WARNING:
This product can expose you to chemicals, including nickel, which is known to the State of California to cause cancer and birth defects or other reproductive harm. For more information, go to www.P65Warnings.ca.gov

Split Reel Ceiling Winch

- 2000 lb. capacity
- Self-braking
- 4.1:1 worm gear ratio
- 1-3/4" diameter reel
- Cable Capacity: 134' (67' per side) of 1/8"
- Black epoxy finish

#HSW01 .....Split Reel Ceiling Winch

⚠ WARNING:
This product can expose you to chemicals, including nickel, which is known to the State of California to cause cancer and birth defects or other reproductive harm. For more information, go to www.P65Warnings.ca.gov

Single Reel Ceiling Winch

- 2000 lb. capacity
- Self-braking
- 4.1:1 worm gear ratio
- 1-3/4" diameter reel
- Cable capacity: 140' of 1/8"
- Black epoxy finish

#HSW02.....Single Reel Ceiling Winch

⚠ WARNING:
This product can expose you to chemicals, including nickel, which is known to the State of California to cause cancer and birth defects or other reproductive harm. For more information, go to www.P65Warnings.ca.gov

Auto Brake Hand Winches

Automatic brake holds handle in position when released to prevent injuries from free spooling handle.

- Drum Diameter: 2.5"
- Gear Ratio: 5.4:1
- Cable Capacity (1/4"): 60 feet
- Strap Capacity: 31 feet
- Zinc plated finish

#DL5351-24Z.....1200 lb
#DL5352-24Z.....1500 lb

⚠ WARNING:
This product can expose you to chemicals, including nickel, which is known to the State of California to cause cancer and birth defects or other reproductive harm. For more information, go to www.P65Warnings.ca.gov

Hand Winch

- 1200 lb. capacity
- Drum Hub Diameter: 1.3"
- Gear Ratio: 3.87:1
- Handle Length: 6.7"
- Cable capacity: (3/16): 65 feet
- Black Epoxy Finish

#HSH067 ..... Hand Winch

⚠ WARNING:
This product can expose you to chemicals, including nickel, which is known to the State of California to cause cancer and birth defects or other reproductive harm. For more information, go to www.P65Warnings.ca.gov

Hand Winch

- 1400 lb. capacity
- Drum Hub Diameter: 7/8"
- Gear Ratio: 4.4:1
- Handle Length: 9.5"
- Cable Capacity: (1/4"): 40 feet
- Strap Capacity: 31 feet

#DL61737 ..... Hand Winch

⚠ WARNING:
This product can expose you to chemicals, including nickel, which is known to the State of California to cause cancer and birth defects or other reproductive harm. For more information, go to www.P65Warnings.ca.gov

Auto Brake Hand Winch

- 3500 lb. capacity
- Drum Hub Diameter: 1-5/16"
- 2-speed • Gear Ratio: 12:1 (High) 6:1 (Low)

* Auto brake/Reversible racket

- Handle Length: 9.5"
- Cable Capacity (3/8"): 37 feet
- Zinc finish

#DL3500 .....Auto Brake Hand Winch

⚠ WARNING:
This product can expose you to chemicals, including nickel, which is known to the State of California to cause cancer and birth defects or other reproductive harm. For more information, go to www.P65Warnings.ca.gov

Speed Crank

The Speed Crank increases the speed of operating manual winches while eliminating the work and strain. The overall length is eight-inches with a 1/2" shaft. Center opening fits over a one-inch nut handle.

#HS802 .....Speed Crank

⚠ WARNING:
This product can expose you to chemicals, including nickel, which is known to the State of California to cause cancer and birth defects or other reproductive harm. For more information, go to www.P65Warnings.ca.gov

Up to 3X faster than manual winches!

Fits 1/2" drill

Fits over base of the winch handle

7/8" Galvanized Swivel Pulley

- Rated Capacity: 132
- Bracket Material: 18 ga G90 Galv.
- Sheave Material: White nylon

#HSH002 ..... 7/8" Galv Swivel Pulley

⚠WARNING:
This product can expose you to chemicals, including nickel, which is known to the State of California to cause cancer and birth defects or other reproductive harm. For more information, go to www.P65Warnings.ca.gov

7/8" Stainless Steel Swivel Pulley

- Rated Capacity: 132
- Bracket Material: 18 ga Stainless Steel
- Sheave Material: Red nylon

#HSH003 ..... 7/8" S.S. Swivel Pulley

⚠WARNING:
This product can expose you to chemicals, including nickel, which is known to the State of California to cause cancer and birth defects or other reproductive harm. For more information, go to www.P65Warnings.ca.gov

1-7/8" Galvanized Swivel Pulley

- Rated Capacity: 660
- Bracket Material: 12 ga G90 Galv.
- Sheave Material: White nylon

#HSH037..... 1-7/8" Galv. Swivel Pulley

⚠WARNING:
This product can expose you to chemicals, including nickel, which is known to the State of California to cause cancer and birth defects or other reproductive harm. For more information, go to www.P65Warnings.ca.gov

1-7/8" Galvanized Swivel Pulley

- Rated Capacity: 220
- Bracket Material: 12ga, G90 Galv.
- Sheave Material: Red Nylon

#HSH004 ..... 1-7/8" Galv. Swivel Pulley

⚠WARNING:
This product can expose you to chemicals, including nickel, which is known to the State of California to cause cancer and birth defects or other reproductive harm. For more information, go to www.P65Warnings.ca.gov

1-3/8" Stainless Steel Split Pulley

- Rated Capacity: 660
- Bracket Material: 12 ga G90 Galv.
- Sheave Material: White nylon

#HSH010 ..... 1-3/8" SS Split Pulley

⚠WARNING:
This product can expose you to chemicals, including nickel, which is known to the State of California to cause cancer and birth defects or other reproductive harm. For more information, go to www.P65Warnings.ca.gov

1-1/2" Stainless Steel Split Pulley

- Rated Capacity: 220
- Bracket Material: Stainless Steel
- Sheave Material: Stainless Steel

#521531..... 1-1/2" SS Split Pulley

⚠WARNING:
This product can expose you to chemicals, including nickel, which is known to the State of California to cause cancer and birth defects or other reproductive harm. For more information, go to www.P65Warnings.ca.gov

1-1/2" Galvanized Split Pulley

- Rated Capacity: 2000
- Bracket Material: 12 ga G90 Galv.
- Sheave Material: Galv. Steel

#HSH008 ..... 1-1/2" Galv, Split Pulley

⚠WARNING:
This product can expose you to chemicals, including nickel, which is known to the State of California to cause cancer and birth defects or other reproductive harm. For more information, go to www.P65Warnings.ca.gov

1-3/4" Galvanized Split Pulley

- Rated Capacity: 660
- Bracket Material: 12 ga G90 Galv.
- Sheave Material: Red reinforced nylon

#HSH005 ..... 1-3/4" Galv. Split Pulley

⚠WARNING:
This product can expose you to chemicals, including nickel, which is known to the State of California to cause cancer and birth defects or other reproductive harm. For more information, go to www.P65Warnings.ca.gov

1-7/8" Galvanized Split Pulley

- Rated Capacity: 660
- Bracket Material: 12 ga G90 Galv.
- Sheave Material: White nylon

#HSH038 ..... 1-7/8" Galv. Split Pulley

⚠WARNING:
This product can expose you to chemicals, including nickel, which is known to the State of California to cause cancer and birth defects or other reproductive harm. For more information, go to www.P65Warnings.ca.gov

2-1/2" Corner Pulley

- Rated Capacity: 1120
- Bracket Material: 11 ga G90 Galv.
- Sheave Material: Red Fiberglass

#HSH025 ..... 2-1/2" Corner Pulley

⚠WARNING:
This product can expose you to chemicals, including nickel, which is known to the State of California to cause cancer and birth defects or other reproductive harm. For more information, go to www.P65Warnings.ca.gov

3-1/2" Corner Pulley

- Rated Capacity: 3,000
- Bracket Material: 11 ga G90 Galv.
- Sheave Material: Cast iron
- Bearings: Sealed bearings

#HSH001 ..... 3-1/2" Corner Pulley

⚠WARNING:
This product can expose you to chemicals, including nickel, which is known to the State of California to cause cancer and birth defects or other reproductive harm. For more information, go to www.P65Warnings.ca.gov

3-1/2" Corner Pulley

- Rated Capacity: 2,000
- Bracket Material: 11 ga G90 Galv.
- Sheave Material: Red Nylon

#HSH007..... 3-1/2" Corner Pulley

⚠WARNING:
This product can expose you to chemicals, including nickel, which is known to the State of California to cause cancer and birth defects or other reproductive harm. For more information, go to www.P65Warnings.ca.gov

2-1/2" Thru-Wall Pulley

- Rated Capacity: 880
- Bracket Material: 11 ga G90 Galv.
- Sheave Material: Steel

#61749..... 2-1/2" Thru-Wall Pulley

⚠WARNING:
This product can expose you to chemicals, including nickel, which is known to the State of California to cause cancer and birth defects or other reproductive harm. For more information, go to www.P65Warnings.ca.gov

3-1/2" Thru-Wall Pulley

- Rated Capacity: 3000
- Bracket Material: 8 ga G90 Galv
- Sheave Material: Cast iron
- Bearings: Sealed Bearings

#HSH009 ..... 3-1/2" Thru-Wall Pulley

⚠WARNING:
This product can expose you to chemicals, including nickel, which is known to the State of California to cause cancer and birth defects or other reproductive harm. For more information, go to www.P65Warnings.ca.gov

7/8" Galvanized Swivel Pulley

- Rated Capacity: 2200
- Bracket Material: 11 ga G90 Galv.
- Sheave Material: Cast iron
- Bearings: Needle

#HSH040 ..... 4-1/2" Corner Pulley

⚠WARNING:
This product can expose you to chemicals, including nickel, which is known to the State of California to cause cancer and birth defects or other reproductive harm. For more information, go to www.P65Warnings.ca.gov

3-1/2" Double Back Pulley

- Rated Capacity: 4,000
- Bracket Material: 12ga, G90 Galv.
- Sheave Material: Red Cast Iron

#HSH071 ..... 3-1/2" Double Back Pulley

⚠WARNING:
This product can expose you to chemicals, including nickel, which is known to the State of California to cause cancer and birth defects or other reproductive harm. For more information, go to www.P65Warnings.ca.gov

3-1/2" Horizontal Pulley

- Rated Capacity: 2,000
- Bracket Material: 11 ga G90 Galv.
- Sheave Material: Red Fiberglass

#HSH042 ..... 3-1/2" Horizontal Pulley

⚠WARNING:
This product can expose you to chemicals, including nickel, which is known to the State of California to cause cancer and birth defects or other reproductive harm. For more information, go to www.P65Warnings.ca.gov

3-1/2" Enclosed Single Block Pulley

- Rated Capacity: 2,000
- Bracket Material: 11 ga G90 Galv.
- Sheave Material: Red Fiberglass

#HSH039 ..... 3-1/2" Enclosed Single Block Pulley

⚠WARNING:
This product can expose you to chemicals, including nickel, which is known to the State of California to cause cancer and birth defects or other reproductive harm. For more information, go to www.P65Warnings.ca.gov

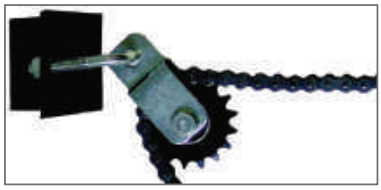

Chain & Sprocket Corner Kit

- Rated Capacity: 2200
- Bracket Material: 11 ga G90 Galv.
- Sheave Material: Black Steel Spocket
- Bearings: Needle

#HSH006 ..... Chain Sprocket Corner Kit
#52155-1* ..... Bracket only
#HB3003 ..... Sprocket pulley only

⚠ WARNING:
*This product can expose you to chemicals, including nickel, which is known to the State of California to cause cancer and birth defects or other reproductive harm. For more information, go to www.P65Warnings.ca.gov

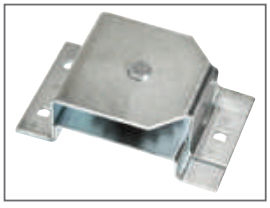

Horizontal Bracket with Chain Sprocket

- Rated Capacity: 2000
- Bracket Material: 11 ga G90 Gal
- Sheave Material: Plated steel
- Bearings: Sealed Bearings

#HSH043 ..... Horizontal Chain Sprocket

⚠ WARNING:
This product can expose you to chemicals, including nickel, which is known to the State of California to cause cancer and birth defects or other reproductive harm. For more information, go to www.P65Warnings.ca.gov

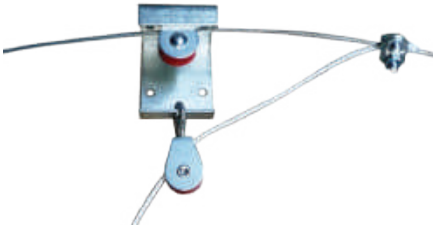

Bracket With Dual Pulleys

This bracket has two pulleys. One pulley can be used to guide the main cable or rod and the other pulley can be used to guide the opening and closing of the vent doors. The bracket should be secured to the wall with two wood screws (not provided).

- Rated Capacity: 132
- Bracket Material: 11 ga G90 Galv.
- Sheave Material: Red Nylon

#HSH041 ..... Bracket with Dual Pulleys

⚠ WARNING:
This product can expose you to chemicals, including nickel, which is known to the State of California to cause cancer and birth defects or other reproductive harm. For more information, go to www.P65Warnings.ca.gov

Corner Bracket

- 3/16" thick painted steel brackets
- 15" long x 4-1/2" tall legs
- Shown with HSH001 corner pulley (not included)

#617431 ..... Large Corner Bracket
#60649 ..... U-bolt
#60692 ..... Lock nut

⚠ WARNING:
This product can expose you to chemicals, including nickel, which is known to the State of California to cause cancer and birth defects or other reproductive harm. For more information, go to www.P65Warnings.ca.gov

Cup Hook Driver

Driver holds cuphooks in place allowing for single-handed placement. After insertion, cuphook is released with a simple pivot of the tool. Also excellent for removing existing cuphooks safely. Fits drills with 1/2" chuck.

#HB6008 ..... Cup and Hook Driver

CEILING EXTENSION

Field drill hole in pipe & driver pieces to accept bolt or pin

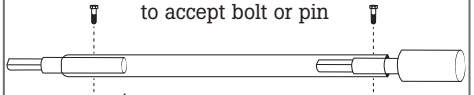

1/2" Conduit (cut to length)

⚠ WARNING:
This product can expose you to chemicals, including nickel, which is known to the State of California to cause cancer and birth defects or other reproductive harm. For more information, go to www.P65Warnings.ca.gov

Cup Hook

#60665 ..... 1/4" x 3-1/2"
#606655 ..... 1/4 x 3-1/2" - SS

⚠ WARNING:
This product can expose you to chemicals, including nickel, which is known to the State of California to cause cancer and birth defects or other reproductive harm. For more information, go to www.P65Warnings.ca.gov

Screw Hook

#HSH049 ..... 3/8" x 4" zinc
#HSH048 ..... Screw Hook 0.268" X 3-1/2" Zinc

⚠ WARNING:
This product can expose you to chemicals, including nickel, which is known to the State of California to cause cancer and birth defects or other reproductive harm. For more information, go to www.P65Warnings.ca.gov

J-Nail

#80543 ..... 1-3/4", galvanized dbl. dipped, 61/lb

⚠ WARNING:
This product can expose you to chemicals, including nickel, which is known to the State of California to cause cancer and birth defects or other reproductive harm. For more information, go to www.P65Warnings.ca.gov

Brackets & Mounting Hardware

#61745 ..... 3" x 3" Pulley Bracket
#60649 ..... 5/16" U-bolt
#60681 ..... 5/16" Nylock
#60580 ..... 5/16" Washer

⚠ WARNING:
This product can expose you to chemicals, including nickel, which is known to the State of California to cause cancer and birth defects or other reproductive harm. For more information, go to www.P65Warnings.ca.gov

Conduit & Curtain Pipe

#61720 ..... 1/2" x 10' galv. w/crimped end
#10802 ..... Rebar 3-3/8" x 10'
#60340 ..... Pipe 1/2" x 21' galv. w/end coupling

⚠ WARNING:
This product can expose you to chemicals, including nickel, which is known to the State of California to cause cancer and birth defects or other reproductive harm. For more information, go to www.P65Warnings.ca.gov

Curtain Clamp Hanger

#HSH026SS ..... 1/2" SS Curtain Clamp Hanger

⚠ WARNING:
This product can expose you to chemicals, including nickel, which is known to the State of California to cause cancer and birth defects or other reproductive harm. For more information, go to www.P65Warnings.ca.gov

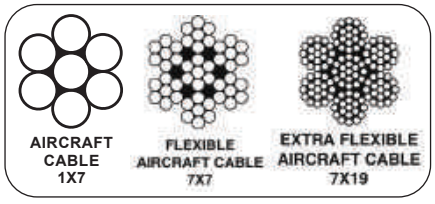

AIRCRAFT CABLE

STAINLESS STEEL

Item#	Size	Dia.	Breaking Strength
61731	7x7	3/32″	920 lbs.
61739	7x7	1/8″	1,700 lbs.
61739-250	7x7 250′	1/8″	1,700 lbs.
61739-500	7x7 500′	1/8″	1,700 lbs.
61739-1000	7x7 1000′	1/8″	1,700 lbs.
617271	7x19	5/32″	2,400 lbs.
617281	7x19	3/16″	3,700 lbs.
617281-250	7x19 250′	3/16″	3,700 lbs.
617281-500	7x19 500′	3/16″	3,700 lbs.
617281-1000	7x19 1000′	3/16″	3,700 lbs.
61728-1200	7x19 1200′	3/16″	4,200 lbs.
61728-1300	7x19 1300′	3/16″	4,200 lbs.
617291	7x19	1/4″	6,400 lbs.
617276	7x19	5/16″	9,000 lbs.

GALVANIZED

Item#	Size	Dia.	Breaking Strength
52260	1x7	1/16″	500 lbs.
52260-500	1x7 500′	1/16″	500 lbs.
52260-1000	1x7 1000′	1/16″	500 lbs.
61726	7x7	1/8″	1,700 lbs.
61726-250	7x7 250′	1/8″	1,700 lbs.
61726-500	7x7 500′	1/8″	1,700 lbs.
61726-1000	7x7 1000′	1/8″	1,700 lbs.
617261	7x19	1/8″	2,000 lbs.
61727	7x19	5/32″	2,800 lbs.
61728	7x19	3/16″	4,200 lbs.
61728-250	7x19 250′	3/16″	4,200 lbs.
61728-500	7x19 500′	3/16″	4,200 lbs.
61728-1000	7x19 1000′	3/16″	4,200 lbs.
61729	7x19	1/4″	7,000 lbs.
61729-100	7x19 100′	1/4″	7,000 lbs.

⚠ WARNING: This product can expose you to chemicals, including nickel, which is known to the State of California to cause cancer and birth defects or other reproductive harm. For more information, go to www.P65Warnings.ca.gov

CABLE CUTTERS

Item#	Description
598820	Banana handle, for cable up to 3/16″
59882	Felco For cable up to 3/16″
HSH059	For cable up to 3/16″
598821	Heavy Duty, replaceable blades, for cables up to 1/4″
AMTC9BLADE	Replacement blades for #598821, price per blade, need two per tool

⚠ WARNING: This product can expose you to chemicals, including nickel, which is known to the State of California to cause cancer and birth defects or other reproductive harm. For more information, go to www.P65Warnings.ca.gov

SWAGGING TOOLS

Item#	Description
6032619	Crimping/Swagging Tool, 18″ Red
AS58471	Crimping/Swagging Tool, 24″ Red
59925	Swagging Tool Heavy Duty

⚠ WARNING: This product can expose you to chemicals, including nickel, which is known to the State of California to cause cancer and birth defects or other reproductive harm. For more information, go to www.P65Warnings.ca.gov

STA-KON CRIMPERS

Item#	Description
HE823015	Klein 1005 Red Handle
10906	Economy Crimper

⚠ WARNING: This product can expose you to chemicals, including nickel, which is known to the State of California to cause cancer and birth defects or other reproductive harm. For more information, go to www.P65Warnings.ca.gov

PLASTIC CURTAIN NUT

(color may vary)

Item#	Description
HSH032	1/8″
HSH027	3/16″

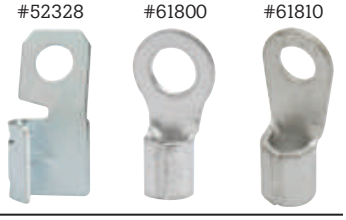

STA-KON

Item#	Description
52328	1/8″ open
61800	1/8″ closed
61810	3/16″ open

⚠ WARNING: This product can expose you to chemicals, including nickel, which is known to the State of California to cause cancer and birth defects or other reproductive harm. For more information, go to www.P65Warnings.ca.gov

ALUMINUM CABLE SLEEVES & BUTTON STOPS

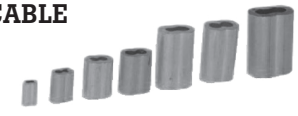

Item#	Description
52286	1/16″
52284	1/8″
52283	3/16″
52285	1/8″ x 3/16″
52288	3/32″
522844	1/4″
HSH064	1/8″ Button Stop
HSH066	3/16″ Button Stop
HBASTOP093	3/32″ Button Stop

⚠ WARNING: This product can expose you to chemicals, including nickel, which is known to the State of California to cause cancer and birth defects or other reproductive harm. For more information, go to www.P65Warnings.ca.gov

CABLE CLAMPS

Item#	Description
61732	1/8″ Galvanized
61733	3/16″ Galvanized
61734	1/4″ Galvanized
HSH052	1/16″ Shocker wire clamp
617321	1/8″ Stainless Steel
617331	3/16″ Stainless Steel

⚠ WARNING: This product can expose you to chemicals, including nickel, which is known to the State of California to cause cancer and birth defects or other reproductive harm. For more information, go to www.P65Warnings.ca.gov

THERMOSTAT

Features a rugged thermoplastic splashproof enclosure with an o-ring sealed set point adjustment knob.

- NEMA 4x Rated
- 30°F to 110°F (-1°C to 43°C) temperature range
- 2°F (1°C) adjustment increments
- Left, Right & Top side wiring knockouts

Item#	Description
59600GP	(Georgia Poultry logo)

HOG SLAT® PRE-WIRED THERMOSTAT W/ 20′ CORD

Weather tight thermostat with 20′ pre-wired piggy-back cord for heating units only.

- Improves performance of heaters by moving the thermostat away from the heater housings
- Plugs into 120V outlet and piggyback outlet connects to heater cord directly
- No hardwiring required, just plug it in
- 15 AMP

Item#	Description
59598	Thermostat w/ 20′ Cord

THERMOSTAT

Pre-wired single stage thermostat to control box heaters and other heating unit applications only.

- Pre-wired with 20′ cord
- Suitable for outdoor installations of where wash-down activities occur
- Complies with NEMA 4X specifications
- Designed for corrosive agricultural environments; NEC 547 compliant
- Designed with a special cover seal o-ring for improved sealing
- SPDT

Item#	Description
HS595991	Nema 4 Enclosure W/20′ Cord

20′ PIGGY-BACK CORD ONLY - 14 GA

Turn any electromechanical thermostat into a remote thermostat with this 20′ cord set. Allows users to create a portable thermostat that can be quickly moved and plugged in as needed to control fans and heating units.

- 14 gauge 3-wire SJ cord
- Piggy-Back design plugs into an outlet, and heater power cord plugs into the piggy-back plug
- 3.75″ pre-stripped on wiring end for easy hook-up

Item#	Description
U02-2601	Cord Only Piggy Back 18 Ga 20′

DIGITAL THERMOSTAT NEMA 4X

- Single Stage
- SPDT output relay
- Easy-to-Read LCD temperature display
- Lockable front-panel display for set up and adjustment
- 120/240V

Item#	Description
59600D	Waterproof rating 120/240 V

RANCO DIGITAL THERMOSTAT CONTROLLER 24V INPUT

- Temperature Setpoint Range: -30° to 220°F
- Differential range: 1° to 30°F
- Pilot duty: 125VA at 120/208/240VAC
- Sensor: Thermistor, 2″ long x 1/4″dia 8′ cable
- Control Ambient Temperatures Operating: -20° to 140° - Storage: -40° to 176°
- Ambient humidity: 0 to 95% RH, non-condensing
- Enclosure: NEMA 1

Item#	Description
3ZP79	24 V input w/ 8′ sensor
3ZP77	120-240 V w/ 8′ sensor
585016	2 Stage 120-240 V w/ 8′ Sensor
585017	2 Stage 24 V w/ 8′ Sensor

NEW!

L.B.WHITE Guardian® 2.0

Direct Spark Ignition

#LB250DSI-LP-2 ..... 250,000 Base Unit – Propane
#LB250DSI-NG-2 .... 250,000 Base Unit – Nat. Gas

Hot Surface Ignition

#LB60HSI-LP-2.....60,000 Base Unit – Propane
#LB60HSI-NG-2.....60,000 Base Unit – Nat. Gas
#LB100HSI-LP-2.....100,000 Base Unit – Propane
#LB100HSI-NG-2.....100,000 Base Unit – Nat. Gas
#LB250HSI-LP-2 ..... 250,000 Base Unit – Propane
#LB250HSI-NG-2 ..... 250,000 Base Unit – Nat. Gas

Pilot Light Models

#LB346-3PLLP..... Classic 60,000 Base Unit – Propane
#LB348-3PLNG..... Classic 60,000 Base Unit – Nat. Gas
#LB377-3PLLP .....Classic 115,000 Base Unit – Propane
#LB379-3PLNG.....Classic 115,000 Base Unit – Nat. Gas
#LB250PL-LP-2 ..... Guardian 250,000 Base Unit – Propane
#LB250PL-NG-2..... Guardian 250,000 Base Unit – Nat. Gas

Thermostats

#LB05568 .....L.B. White Surface Mount
#59598.....Remote w/ 20' cord, plug end
#LB20176.....L.B. White remote w/ 25' cord, Spade end

Gas Hose

#LB20543 ...1/4" x 10', 1/4" NPT rigid x 1/4" swivel-60M pilot
#LB21993 ....3/8" x 10', 1/2" NPT rigid x 5/8" swivel-60M&100M
#LB20714 .... 1/2" x 10', 1/2" NPT rigid x 1/2" swivel-all 250M
#LB20713 .... 1/2" x 6', 1/2" NPT rigid x 1/2" swivel-all 250M

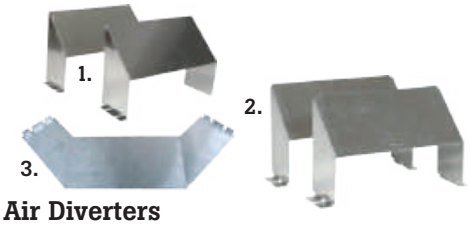

Air Diverters

1) #LB20111 .....Snap-in, 2 pc. 60 HSI
2) #LB20048 .....Snap-in, 2 pc. all 250
3) #LB07742.....Snap-in, 1 pc for 60 classic

⚠ WARNING:
This product can expose you to chemicals, including nickel, which is known to the State of California to cause cancer and birth defects or other reproductive harm. For more information, go to www.P65Warnings.ca.gov

Second Stage Regulator

1) #LB24414..... Natural gas for 250,000
2) #LB06665 ..... LP for all heaters
3) #LB07087..... Pilot & HSI, natural gas for 60k-170k
4) #LB06553 .....Vent over outlet, LP

⚠ WARNING:
This product can expose you to chemicals, including nickel, which is known to the State of California to cause cancer and birth defects or other reproductive harm. For more information, go to www.P65Warnings.ca.gov

Manual Shut-Off Valve

#LB571173.....Manual shut-off valve

⚠ WARNING:
This product can expose you to chemicals, including lead, which is known to the State of California to cause cancer and birth defects or other reproductive harm. For more information, go to www.P65Warnings.ca.gov

Sediment Trap

#LB00815.....Sediment trap for all heaters

⚠ WARNING:
This product can expose you to chemicals, including nickel, which is known to the State of California to cause cancer and birth defects or other reproductive harm. For more information, go to www.P65Warnings.ca.gov

Guardian® 2.0 Forced Air Heaters Replacement parts

- Motor and blower wheels are interchangeable with original Guardian models
- Gas valves for pilot 250M interchange with original Guardian

Gas Valve

#LB573774.....Honeywell, LP
#LB573773.....Honeywell, NG

Flame Sensor Rod - 2.75"

#LB574284 ..... All HSI models

High Limit Switch

#LB573099 ..... 100 & 250M
#LB572501..... 60M

Transformer

#LB574289 ..... All DSI & HSI models

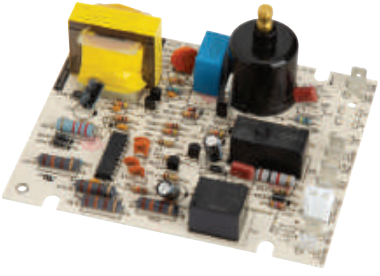

Ignition Control

#LB574287 .....DSI
#LB574288 .....HSI

Igniter And Sensor Assembly

#LB574196.....DSI - all models

Power Cord 10'

#LB520133.....All models

Air Pressure Switch

#LB574239 .....All models

Igniter

#LB573659 ..... All HSI models

Burner Orifice

#LB574293 .....LP, 60M
#LB574294 .....NG, 60M
#LB574213.....LP, 100M
#LB574295 .....NG, 100M
#LB574296 ..... LP, Pilot & HSI 250M
#LB574303 ..... NG, DSI 250M
#LB574304 .....NG Pilot 250M

Pilot Orifice - 250 Pilot

#LB507829.....LP
#LB506968.....NG

LB White 250 Direct Spark

Accessories: Page 68

⚠WARNING:
This product can expose you to chemicals, including nickel, which is known to the State of California to cause cancer and birth defects or other reproductive harm. For more information, go to www.P65Warnings.ca.gov

Key	Item#	Description
1A	**#LB06665**	Secondary regulator, LP
1B	**#LB24414**	Secondary regulator, NG
2	**#LB571173**	Manual shut valve
3	**#LB20714**	1/2" x 10' gas hose, NG & LP
4	**#LB00815**	Sediment trap

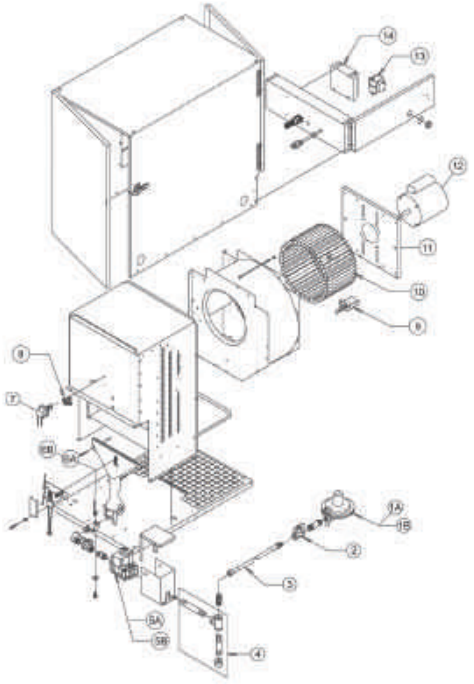

Gas Valve

Key	Item#	Description
5A	**#LB522076**	Honeywell, LP
5B	**#LB522078**	Honeywell, NG

⚠WARNING:
This product can expose you to chemicals, including nickel, which is known to the State of California to cause cancer and birth defects or other reproductive harm. For more information, go to www.P65Warnings.ca.gov

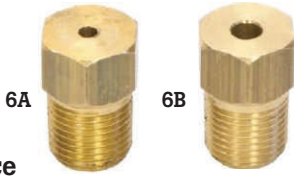

Burner Orifice

Key	Item#	Description
6A	**#LB570053**	LP
6B	**#LB570054**	NG

⚠WARNING:
This product can expose you to chemicals, including lead, which is known to the State of California to cause cancer and birth defects or other reproductive harm. For more information, go to www.P65Warnings.ca.gov

Igniter

Key	Item#	Description
7	**#LB570021**	Spark Igniter Assy

High Limit Switch

Key	Item#	Description
9	**#LB505566**	High Limit Switch

⚠WARNING:
This product can expose you to chemicals, including nickel, which is known to the State of California to cause cancer and birth defects or other reproductive harm. For more information, go to www.P65Warnings.ca.gov

Sail Switch

Key	Item#	Description
10	**#LB24157**	Sail Switch

⚠WARNING:
This product can expose you to chemicals, including nickel, which is known to the State of California to cause cancer and birth defects or other reproductive harm. For more information, go to www.P65Warnings.ca.gov

Blower Wheel

Key	Item#	Description
11	**#LB570481**	10-3/4" dia x 6" wide

⚠WARNING:
This product can expose you to chemicals, including nickel, which is known to the State of California to cause cancer and birth defects or other reproductive harm. For more information, go to www.P65Warnings.ca.gov

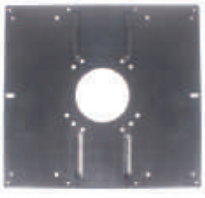

Bracket

Key	Item#	Description
12	**#LB570251**	Motor Mount Bracket

⚠WARNING:
This product can expose you to chemicals, including nickel, which is known to the State of California to cause cancer and birth defects or other reproductive harm. For more information, go to www.P65Warnings.ca.gov

Motor

Key	Item#	Description
13	**#LB520169**	1/3 HP Motor
	#LB571406	Capacitor for 1/3 HP motor

⚠WARNING:
This product can expose you to chemicals, including nickel, which is known to the State of California to cause cancer and birth defects or other reproductive harm. For more information, go to www.P65Warnings.ca.gov

Transformer

Key	Item#	Description
14	**#LB509615**	120/24 V Transformer

Ignition Control

Key	Item#	Description
14	**#LB524900**	Spark Ignition Control

Blower Assembly Complete

Key	Item#	Description
–	**#LB570280**	1/3 HP motor, blower & bracket

⚠WARNING:
This product can expose you to chemicals, including nickel, which is known to the State of California to cause cancer and birth defects or other reproductive harm. For more information, go to www.P65Warnings.ca.gov

LB White 250 Hot Surface

Accessories: Page 68

⚠WARNING:
This product can expose you to chemicals, including nickel, which is known to the State of California to cause cancer and birth defects or other reproductive harm. For more information, go to www.P65Warnings.ca.gov

Key	Item#	Description
1A	**#LB06665**	Secondary regulator, LP
1B	**#LB24414**	Secondary regulator, NG
2	**#LB571173**	Manual shut valve
3	**#LB20714**	1/2" x 10' gas hose, NG & LP
4	**#LB00815**	Sediment trap

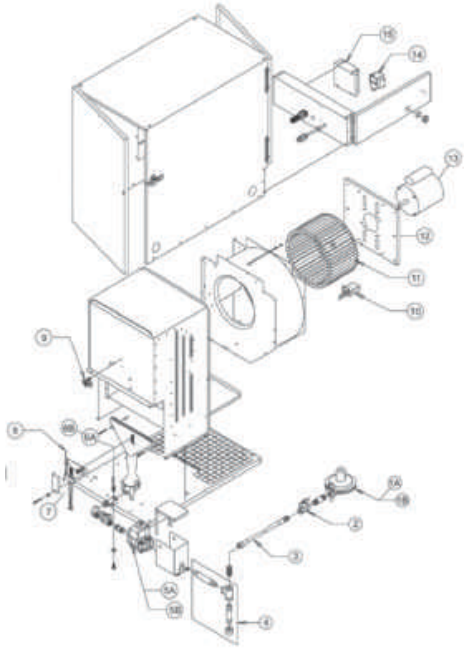

Gas Valves

Key	Item#	Description
5A	**#LB522076**	Honeywell, LP
5B	**#LB522078**	Honeywell, NG

⚠WARNING:
This product can expose you to chemicals, including nickel, which is known to the State of California to cause cancer and birth defects or other reproductive harm. For more information, go to www.P65Warnings.ca.gov

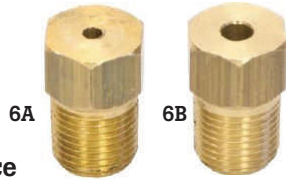

Burner Orifice

Key	Item#	Description
6A	**#LB570053**	LP
6B	**#LB570054**	NG

⚠WARNING:
This product can expose you to chemicals, including lead, which is known to the State of California to cause cancer and birth defects or other reproductive harm. For more information, go to www.P65Warnings.ca.gov

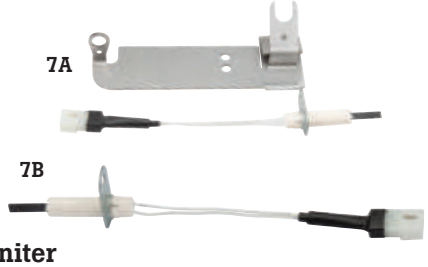

Igniter

Key	Item#	Description
7A)	**#LB573642**	Conversion kit to silicone nitride
7B)	**#LB573659**	New style silicon nitride

Flame Rod Sensor

Key	Item#	Description
8	**#LB520139**	Flame Rod Sensor, 6.5" Lead

High Limit Switch

Key	Item#	Description
9	**#LB505566**	High Limit Switch

⚠WARNING:
This product can expose you to chemicals, including nickel, which is known to the State of California to cause cancer and birth defects or other reproductive harm. For more information, go to www.P65Warnings.ca.gov

Sail Switch

Key	Item#	Description
10	**#LB24157**	Sail switch

⚠WARNING:
This product can expose you to chemicals, including nickel, which is known to the State of California to cause cancer and birth defects or other reproductive harm. For more information, go to www.P65Warnings.ca.gov

Blower Wheel

Key	Item#	Description
11	**#LB570481**	10-3/4" dia x 6" wide

⚠WARNING:
This product can expose you to chemicals, including nickel, which is known to the State of California to cause cancer and birth defects or other reproductive harm. For more information, go to www.P65Warnings.ca.gov

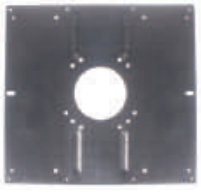

Bracket

Key	Item#	Description
12	**#LB570251**	Motor Mount Brkt.

⚠WARNING:
This product can expose you to chemicals, including nickel, which is known to the State of California to cause cancer and birth defects or other reproductive harm. For more information, go to www.P65Warnings.ca.gov

Motor

Key	Item#	Description
13	**#LB520169**	1/3 HP Motor
	#LB571406	Capacitor for 1/3 HP motor

⚠WARNING:
This product can expose you to chemicals, including nickel, which is known to the State of California to cause cancer and birth defects or other reproductive harm. For more information, go to www.P65Warnings.ca.gov

Transformer

Key	Item#	Description
14	**#LB509615**	120/24 V transformer

Ignition Control

Key	Item#	Description
15	**#LB509298**	Ignition control

LB White 250 Pilot

Accessories: Page 68

⚠WARNING:
This product can expose you to chemicals, including nickel, which is known to the State of California to cause cancer and birth defects or other reproductive harm. For more information, go to www.P65Warnings.ca.gov

Key	Item#	Description
1A	**#LB06665**	Secondary regulator, LP
1B	**#LB24414**	Secondary regulator, NG
2	**#LB571173**	Manual shut valve
3	**#LB20714**	1/2" x 10' gas hose, NG & LP
4	**#LB00815**	Sediment trap

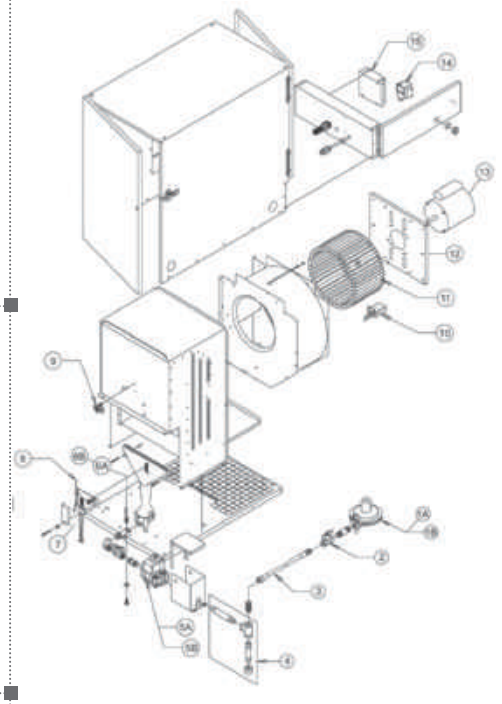

Gas Valves

Key	Item#	Description
5A	**#LB521615**	Honeywell, LP
5B	**#LB521616**	Honeywell, NG

⚠WARNING:
This product can expose you to chemicals, including nickel, which is known to the State of California to cause cancer and birth defects or other reproductive harm. For more information, go to www.P65Warnings.ca.gov

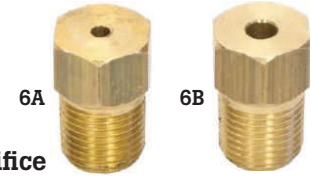

Burner Orifice

Key	Item#	Description
6A	**#LB570053**	LP
6B	**#LB570054**	NG

⚠WARNING:
This product can expose you to chemicals, including lead, which is known to the State of California to cause cancer and birth defects or other reproductive harm. For more information, go to www.P65Warnings.ca.gov

Pilot Gasket

Key	Item#	Description
7	**#LB570461**	Pilot Gasket

Thermocouple

Key	Item#	Description
8	**#LB503497**	22" Snap-in

Pilot Tube

Key	Item#	Description
9	**#LB570661**	Pilot Tube

Pilot Orifice

Key	Item#	Description
10A	**#LB507829**	LP
10B	**#LB506968**	NG

⚠WARNING:
This product can expose you to chemicals, including lead, which is known to the State of California to cause cancer and birth defects or other reproductive harm. For more information, go to www.P65Warnings.ca.gov

Terminal Strip

Key	Item#	Description
11	**#LB570491**	Terminal Strip

⚠WARNING:
This product can expose you to chemicals, including nickel, which is known to the State of California to cause cancer and birth defects or other reproductive harm. For more information, go to www.P65Warnings.ca.gov

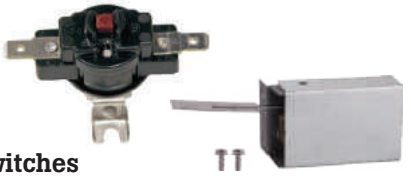

Switches

Key	Item#	Description
12	**#LB505566**	High Limit Switch
13	**#LB24157**	Sail switch

⚠WARNING:
This product can expose you to chemicals, including nickel, which is known to the State of California to cause cancer and birth defects or other reproductive harm. For more information, go to www.P65Warnings.ca.gov

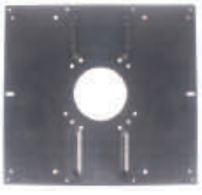

Bracket

Key	Item#	Description
14	**#LB570251**	Motor Mount Brkt.

⚠WARNING:
This product can expose you to chemicals, including nickel, which is known to the State of California to cause cancer and birth defects or other reproductive harm. For more information, go to www.P65Warnings.ca.gov

Motor

Key	Item#	Description
15	**#LB520169**	1/3 HP Motor
	#LB571406	Capacitor for 1/3 HP motor

⚠WARNING:
This product can expose you to chemicals, including nickel, which is known to the State of California to cause cancer and birth defects or other reproductive harm. For more information, go to www.P65Warnings.ca.gov

Blower Wheel

Key	Item#	Description
16	**#LB570481**	10-3/4" dia x 6" wide

⚠WARNING:
This product can expose you to chemicals, including nickel, which is known to the State of California to cause cancer and birth defects or other reproductive harm. For more information, go to www.P65Warnings.ca.gov

Key	Item#	Description
1	**#LB06665**	Secondary regulator
2A	**#LB20714**	1/2" x 10' gas hose, NG
2B	**#LB20543**	1/4" x 10' gas hose, LP
3	**#LB571173**	Manual shut valve
10	**#LB05568**	Surface mount thermostat
17	**#LB00815**	Sediment trap

Gas Valves

Key	Item#	Description
4A	**#LB502309**	Basotrol, LP & NG
4B	**#LB521615**	Honeywell, LP
4C	**#LB521616**	Honeywell, NG

⚠ WARNING:
This product can expose you to chemicals, including nickel, which is known to the State of California to cause cancer and birth defects or other reproductive harm. For more information, go to www.P65Warnings.ca.gov

Burner Orifice

Key	Item#	Description
5A	**#LB570077**	LP
5B	**#LB570078**	NG

⚠ WARNING:
This product can expose you to chemicals, including lead, which is known to the State of California to cause cancer and birth defects or other reproductive harm. For more information, go to www.P65Warnings.ca.gov

Pilot Orifice

Key	Item#	Description
6A	**#LB502689**	LP
6B	**#LB570065**	NG

⚠ WARNING:
This product can expose you to chemicals, including lead, which is known to the State of California to cause cancer and birth defects or other reproductive harm. For more information, go to www.P65Warnings.ca.gov

⚠ WARNING:
This product can expose you to chemicals, including nickel, which is known to the State of California to cause cancer and birth defects or other reproductive harm. For more information, go to www.P65Warnings.ca.gov

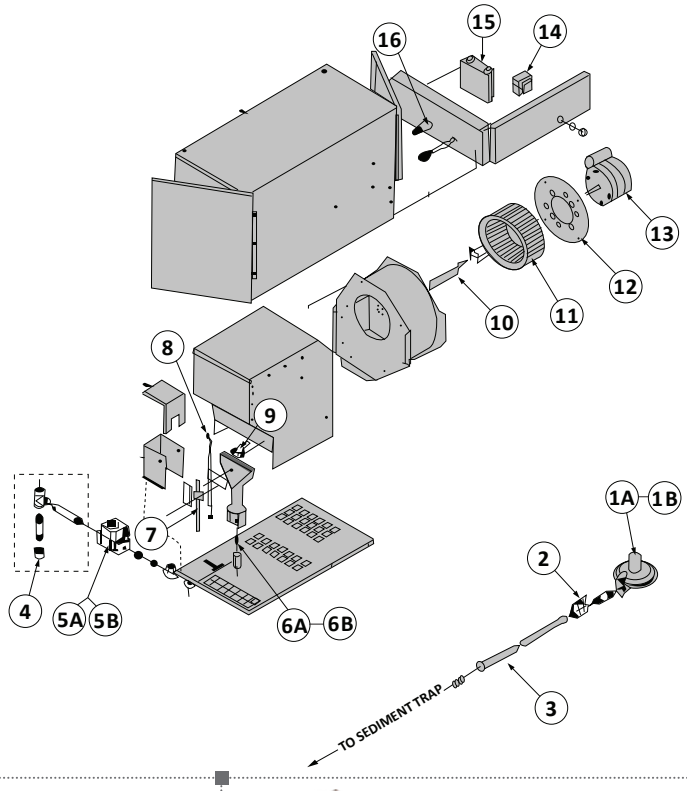

Pilot Shield

Key	Item#	Description
7	**#LB573700**	Pilot Shield

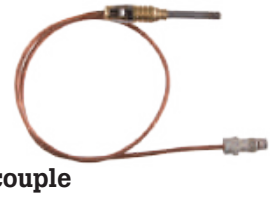

Thermocouple

Key	Item#	Description
8	**#LB503497**	22" Snap-in

Pilot Tube

Key	Item#	Description
9	**#LB521380**	Pilot tube

Motor

Key	Item#	Description
11	**#LB520290**	1/12 Hp motor

⚠ WARNING:
This product can expose you to chemicals, including nickel, which is known to the State of California to cause cancer and birth defects or other reproductive harm. For more information, go to www.P65Warnings.ca.gov

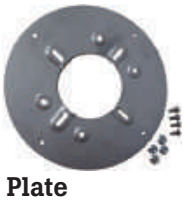

Motor Mount Plate

Key	Item#	Description
12	**#LB570382**	Motor Mount Plate

⚠ WARNING:
This product can expose you to chemicals, including nickel, which is known to the State of California to cause cancer and birth defects or other reproductive harm. For more information, go to www.P65Warnings.ca.gov

Blower Wheel

Key	Item#	Description
13	**#LB570230**	6-1/2" dia x 3-1/8" wide

⚠ WARNING:
This product can expose you to chemicals, including nickel, which is known to the State of California to cause cancer and birth defects or other reproductive harm. For more information, go to www.P65Warnings.ca.gov

Fan Housing

Key	Item#	Description
14	**#LB05579**	w/ motor mount

⚠ WARNING:
This product can expose you to chemicals, including nickel, which is known to the State of California to cause cancer and birth defects or other reproductive harm. For more information, go to www.P65Warnings.ca.gov

High Limit Switch

Key	Item#	Description
15	**#LB503933**	High Limit Switch

⚠ WARNING:
This product can expose you to chemicals, including nickel, which is known to the State of California to cause cancer and birth defects or other reproductive harm. For more information, go to www.P65Warnings.ca.gov

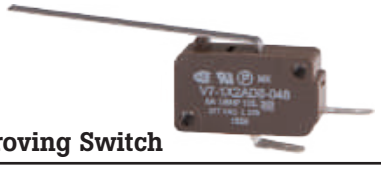

Air Proving Switch

Item#	Description
#LB502680	Air Proving Switch

⚠ WARNING:
This product can expose you to chemicals, including nickel, which is known to the State of California to cause cancer and birth defects or other reproductive harm. For more information, go to www.P65Warnings.ca.gov

Key	Item#	Description
1A	**#LB06665**	Secondary regulator,LP
1B	**#LB07087**	Secondary regulator, NG
2	**#LB571173**	Manual shut valve
3A	**#LB20714**	1/2" x 10' gas hose, NG
3B	**#LB20543**	1/4" x 10' gas hose, LP
4	**#LB00815**	Sediment trap

Gas Valves

Key	Item#	Description
5A	**#LB522076**	Honeywell, LP
5B	**#LB522078**	Honeywell, NG

⚠ WARNING:
This product can expose you to chemicals, including nickel, which is known to the State of California to cause cancer and birth defects or other reproductive harm. For more information, go to www.P65Warnings.ca.gov

Burner Orifice

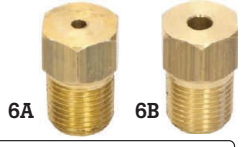

Key	Item#	Description
6A	**#LB570225**	LP
6B	**#LB570226**	NG

⚠ WARNING:
This product can expose you to chemicals, including lead, which is known to the State of California to cause cancer and birth defects or other reproductive harm. For more information, go to www.P65Warnings.ca.gov

Igniter

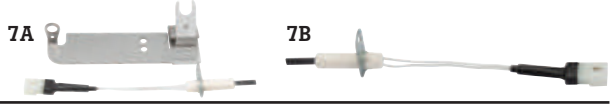

Key	Item#	Description
7A)	**#LB573642**	Conversion kit to silicone nitride
7B)	**#LB573659**	New style silicon nitride

⚠ WARNING:
This product can expose you to chemicals, including nickel, which is known to the State of California to cause cancer and birth defects or other reproductive harm. For more information, go to www.P65Warnings.ca.gov

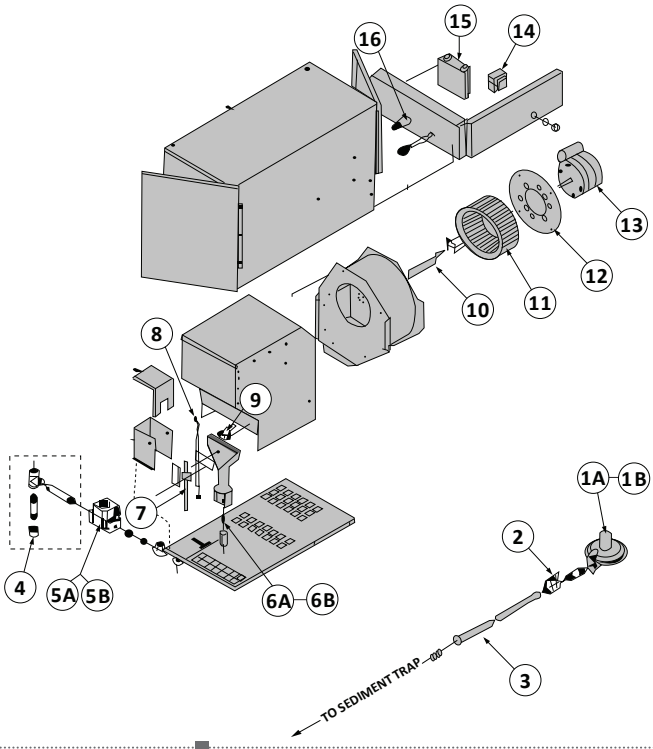

Flame Probe

Key	Item#	Description
8	**#LB572412**	Flame probe 45° bend

High Limit Switch

Key	Item#	Description
9	**#LB503933**	High Limit Switch

⚠ WARNING:
This product can expose you to chemicals, including nickel, which is known to the State of California to cause cancer and birth defects or other reproductive harm. For more information, go to www.P65Warnings.ca.gov

Sail Switch

Key	Item#	Description
10	**#LB570027**	Sail switch

⚠ WARNING:
This product can expose you to chemicals, including nickel, which is known to the State of California to cause cancer and birth defects or other reproductive harm. For more information, go to www.P65Warnings.ca.gov

Blower Wheel

Key	Item#	Description
11	**#LB570230**	6-1/2" dia x 3-1/8" wide

⚠ WARNING:
This product can expose you to chemicals, including nickel, which is known to the State of California to cause cancer and birth defects or other reproductive harm. For more information, go to www.P65Warnings.ca.gov

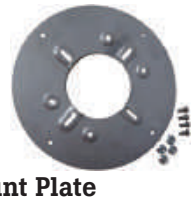

Motor Mount Plate

Key	Item#	Description
12	**#LB570382**	Motor mount plate

⚠ WARNING:
This product can expose you to chemicals, including nickel, which is known to the State of California to cause cancer and birth defects or other reproductive harm. For more information, go to www.P65Warnings.ca.gov

Motor

Key	Item#	Description
13	**#LB520290**	1/12 Hp motor

⚠ WARNING:
This product can expose you to chemicals, including nickel, which is known to the State of California to cause cancer and birth defects or other reproductive harm. For more information, go to www.P65Warnings.ca.gov

Transformer

Key	Item#	Description
14	**#LB509615**	120/24 V transformer

Ignition Control

Key	Item#	Description
15	**#LB509298**	Ignition control

Wiring Kit

Key	Item#	Description
16	**#LB23709**	Wiring Kit w/harness

Key	Item#	Description
1A	**#LB06665**	Secondary regulator, LP
1B	**#LB24414**	Secondary regulator, NG
2	**#LB571173**	Manual shut valve
3	**#LB20714**	1/2" x 10' gas hose, NG & LP
4	**#LB00815**	Sediment trap

Gas Valves

Key	Item#	Description
5A	**#LB522076**	Honeywell, LP
5B	**#LB522078**	Honeywell, NG

⚠ WARNING:
This product can expose you to chemicals, including nickel, which is known to the State of California to cause cancer and birth defects or other reproductive harm. For more information, go to www.P65Warnings.ca.gov

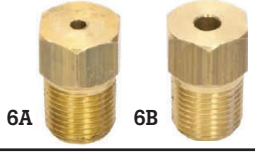

Burner Orifice

Key	Item#	Description
6A	**#LB570281**	LP
6B	**#LB570282**	NG

⚠ WARNING:
This product can expose you to chemicals, including lead, which is known to the State of California to cause cancer and birth defects or other reproductive harm. For more information, go to www.P65Warnings.ca.gov

⚠ WARNING:
This product can expose you to chemicals, including nickel, which is known to the State of California to cause cancer and birth defects or other reproductive harm. For more information, go to www.P65Warnings.ca.gov

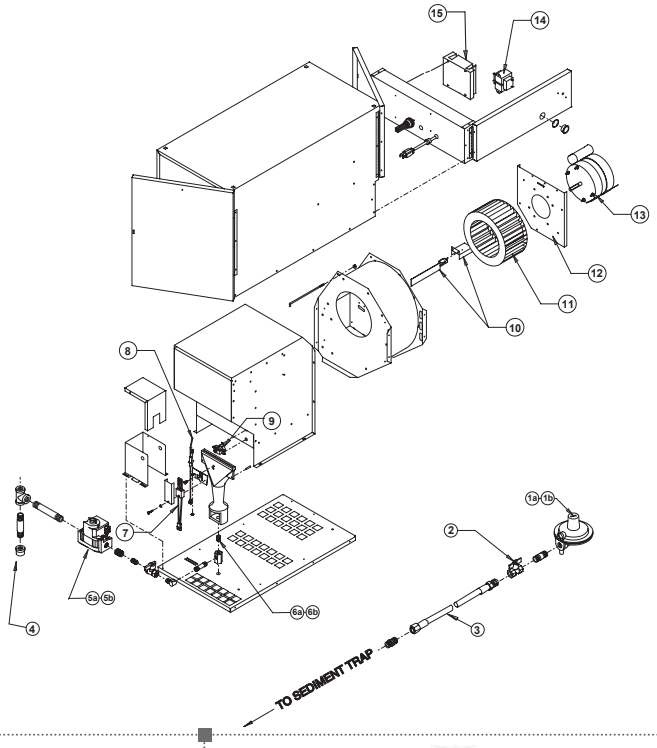

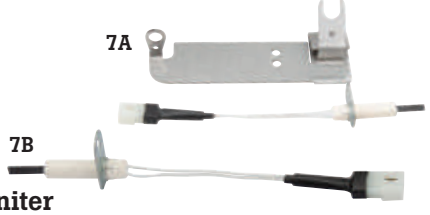

Igniter

Key	Item#	Description
7A)	**#LB573642**	Conversion kit to silicone nitride
7B)	**#LB573659**	New style silicon nitride

Flame Rod Sensor

Key	Item#	Description
8	**#LB520139**	6.5" Lead

High Limit Switch

Key	Item#	Description
9	**#LB503933**	High Limit Switch

⚠ WARNING:
This product can expose you to chemicals, including nickel, which is known to the State of California to cause cancer and birth defects or other reproductive harm. For more information, go to www.P65Warnings.ca.gov

Sail Switch

Key	Item#	Description
10	**#LB570493**	Sail Switch

⚠ WARNING:
This product can expose you to chemicals, including nickel, which is known to the State of California to cause cancer and birth defects or other reproductive harm. For more information, go to www.P65Warnings.ca.gov

Blower Wheel

Key	Item#	Description
11	**#LB570304**	8" dia x 4-7/8" wide

⚠ WARNING:
This product can expose you to chemicals, including nickel, which is known to the State of California to cause cancer and birth defects or other reproductive harm. For more information, go to www.P65Warnings.ca.gov

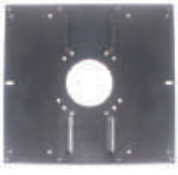

Bracket

Key	Item#	Description
12	**#LB570383**	Motor Mount Brkt.

⚠ WARNING:
This product can expose you to chemicals, including nickel, which is known to the State of California to cause cancer and birth defects or other reproductive harm. For more information, go to www.P65Warnings.ca.gov

Motor

Key	Item#	Description
13	**#LB520292**	1/8 Hp motor

⚠ WARNING:
This product can expose you to chemicals, including nickel, which is known to the State of California to cause cancer and birth defects or other reproductive harm. For more information, go to www.P65Warnings.ca.gov

Transformer

Key	Item#	Description
14	**#LB509615**	120/24 V

Ignition Control

Key	Item#	Description
15	**#LB509298**	Ignition control

- 250,000 BTU model available
- Optional direct spark ignition
- Easy-access electrical control unit
- Quick-disconnect wiring harness for easy service; gold-plated contacts prevent corrosion
- Electronic hot surface instant-on ignition
- Safety shut-off after failure detection
- Manual reset high temp limit switch
- Backup safety switch

#H6601-0104 ..... 75K, LP w/ hanging kit
#H6601-7024 ..... 225K, LP, w/ hanging kit
#H6601-7026 ..... 225K, NG, w/ hanging kit
#H6450-0220 ..... Outside mount kit

⚠ WARNING:
This product can expose you to chemicals, including nickel, which is known to the State of California to cause cancer and birth defects or other reproductive harm. For more information, go to www.P65Warnings.ca.gov

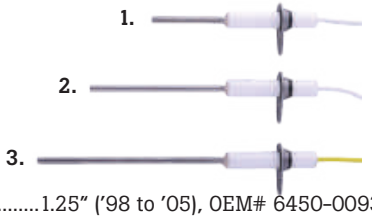

GrowerSELECT

Flame Probes

1) #HS640 ..... 1.25" ('98 to '05), OEM# 6450-0093
2) #HS641 ..... 2.2" ('05 to present), OEM# 6450-0094
3) #HS567 ..... 4" (prior to '98), OEM# 6450-0091

GrowerSELECT

Motors

Item#	Description	OEM#
#HS9045	1/10 HP for 75K	3017-1302
#HS9040A	1/3 HP for 225	3017-1300
#2MDV4	Capacitor for 1/3 Hp	N/A
#HS6401-2315	Motor/ Plate Assy for 75K	6401-2315
#HS6401-2317	Blower/Motor Assy for 75K	6401-2317
#HSBMA1	Blower/Motor Assy for 225K	6401-1347

⚠ WARNING:
This product can expose you to chemicals, including nickel, which is known to the State of California to cause cancer and birth defects or other reproductive harm. For more information, go to www.P65Warnings.ca.gov

GrowerSELECT

Blower Wheels

#HSBW3 ..... 6-3/8" x 4" CCW for 75K, OEM# 6401-1726
#HSBW1 ..... 10-3/4" x 4-7/8" CCW for 225K, OEM# 6401-1318

⚠ WARNING:
This product can expose you to chemicals, including nickel, which is known to the State of California to cause cancer and birth defects or other reproductive harm. For more information, go to www.P65Warnings.ca.gov

GrowerSELECT

Switches (high limit)

#HS501 ..... for 75K, OEM# 3005-0108
#HS500 ..... for 225K, OEM# 3005-0107

⚠ WARNING:
This product can expose you to chemicals, including nickel, which is known to the State of California to cause cancer and birth defects or other reproductive harm. For more information, go to www.P65Warnings.ca.gov

Low Pressure Gas Switch

#H3001-0111 ..... Low Pressure Gas Switch

⚠ WARNING:
This product can expose you to chemicals, including nickel, which is known to the State of California to cause cancer and birth defects or other reproductive harm. For more information, go to www.P65Warnings.ca.gov

#H6401-2878 #H6401-2877

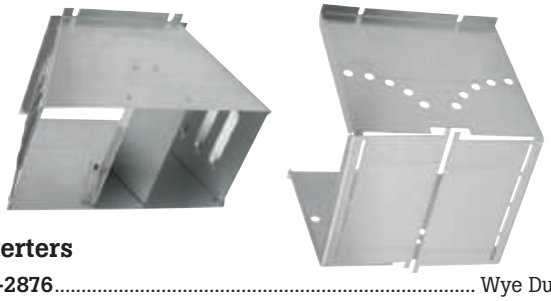

Air Diverters

#H6401-2876 ..... Wye Duct, 225K
#H6401-2878 ..... Wye Duct 75K
#H6401-2877 ..... T Duct, 225K
#H6401-2888 ..... T Duct, 75K

GrowerSELECT

Stainless Steel Igniters

4) #HS635 ..... Mini 2" for conversion, OEM# 3002-5000
5) #HS637 ..... 3" ('06 to present), OEM# 3002-3304
6) #HS636 ..... 3.5" (prior to '06), OEM# 3002-3000
7) #HS638 ..... 2" conversion kit, OEM# 6450-0212

GrowerSELECT

Ceramic Igniter

(conversion kit changes flat ceramic to 2" S.S.)

#HS566 ..... Ceramic Igniter-old style, OEM# 6450-3002
#HS638 ..... Conversion kit, OEM# 6450-0212

#H3004-1301 #HS7008LP

Gas Valves

#H3004-1301 ..... Honeywell w/ nipple to covert White Rogers
#HS7008LP ..... Honeywell, LP OEM# 3004-0100
#HS7008NG ..... Honeywell, NG OEM# 3004-0101

⚠ WARNING:
This product can expose you to chemicals, including nickel, which is known to the State of California to cause cancer and birth defects or other reproductive harm. For more information, go to www.P65Warnings.ca.gov

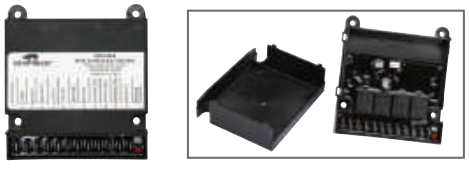

Control Module

#HS7001 ..... Hot Surface Ignition models, OEM #3591-1851
#HS7002 ..... Direct Spark Ignition models, OEM #3591-1200

Sail Switch

#EL1215 ..... Switch Micro, Sail Lever

⚠ WARNING:
This product can expose you to chemicals, including nickel, which is known to the State of California to cause cancer and birth defects or other reproductive harm. For more information, go to www.P65Warnings.ca.gov

*Use of Original Equipment Manufacturer part numbers is for reference only

AP Heaters

*Use of Original Equipment Manufacturer part numbers is for reference only

GrowerSELECT

Motors

#HS5420-0-913.....Mounting/Motor Assembly 80K, OEM# 5420-0-913

#G20-5099D .....1/3 Motor for 225K

⚠WARNING:
This product can expose you to chemicals, including nickel, which is known to the State of California to cause cancer and birth defects or other reproductive harm. For more information, go to www.P65Warnings.ca.gov

GrowerSELECT

Air Proving Switch

#EL1078 ..... For 80 & 225K, OEM# 5430-1-904

⚠WARNING:
This product can expose you to chemicals, including nickel, which is known to the State of California to cause cancer and birth defects or other reproductive harm. For more information, go to www.P65Warnings.ca.gov

GrowerSELECT

Igniter

#HS634 .....2", 24 VAC, OEM# 20-5074M

1-1/4" L.P. Regulator

#609592 ..... for PuraFire

Flame Safeguard Relay

#G20-5001B..... for PuraFire

GrowerSELECT

Blower Wheels

#HSBW6..... 6-3/4" x 3" CW for 80K, OEM# 20-5008

#HSBW4.....9-7/8' x 6" CW for 225K, OEM# 20-5110

⚠WARNING:
This product can expose you to chemicals, including nickel, which is known to the State of California to cause cancer and birth defects or other reproductive harm. For more information, go to www.P65Warnings.ca.gov

GrowerSELECT

High Limit Switch

#HS501..... Manual reset, OEM# 20-5046

⚠WARNING:
This product can expose you to chemicals, including nickel, which is known to the State of California to cause cancer and birth defects or other reproductive harm. For more information, go to www.P65Warnings.ca.gov

Secondary Gas Regulator

- 11-14" water column

#H1045-0100.....for PuraFire

GrowerSELECT

Flame Rod

#HS596 ..... For 80 & 225K, OEM# 20-5045

GrowerSELECT

Transformer

- Used in many applications
- Compatible with most heater brands.

#HSXF120-24 ....Universal 120/240, OEM# 20-5036

Gas Valve

#G20-5070K.....PuraFire Main LP

⚠WARNING:
This product can expose you to chemicals, including nickel, which is known to the State of California to cause cancer and birth defects or other reproductive harm. For more information, go to www.P65Warnings.ca.gov

VariFlame Repair Parts

#GVF1-3002.....Flame Probe

#GVF1- 3004 .....Ignitor Assy (HSI)

#GVF1-1020..... ON/OFF Control

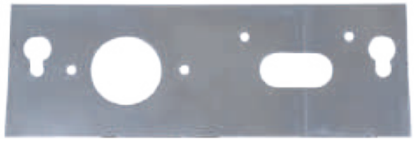

#GVF2-1016.....Sail Switch Mounting Bracket

⚠WARNING:
This product can expose you to chemicals, including nickel, which is known to the State of California to cause cancer and birth defects or other reproductive harm. For more information, go to www.P65Warnings.ca.gov

#GVF3-1022.....Gas Valve, LP

NEW!

GrowerSELECT®

Poultry Water Line Pressure Regulator

- Provides high water volume at the low pressures needed.
- Large diameter flush valve for better flushing of biofilm and sediment.
- Mesh reinforced rubber diaphragm for better resistance to stretching.
- Longer adjustment knob for ease of adjustment while low to the ground.
- Standpipe sold separately

#HS822 ..... Water pressure regulator

Available Water Line Adapters

HS822-50W 7/8" OD Round Pipe *Ziggity*	**HS822-51** 22MM Square Pipe *Lubing*	**60179** 1.05" OD Pipe *Valco, Choretime, & Cumberland*	**DIP2205212 & 60026** 1" OD Pipe *Plasson*	
		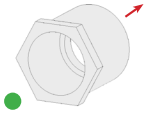	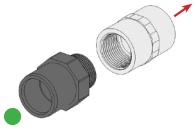	↗ = Regulator end, slip fit. Do not glue. ● = Water line end, slip fit. Do not glue. ● = Water line end, must use PVC glue.

Flexible Standpipe Assy

- for HS822 regulator
- Hi-visibility yellow float ball

#HS822-FSA24..... 24" High
#HS822-FSA18..... 18" High

Manual Flush Assy

- Replaces Ziggity # 1374

#HS822-40..... for HS822 regulator

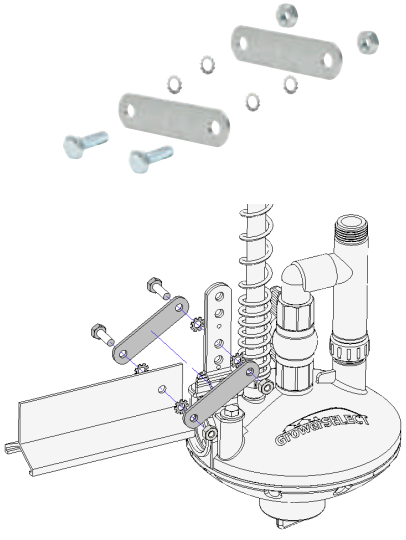

Aluminum Rail Bracket Kit

- Mounting kit for attaching aluminum support rail to HS822 regulator

#HS822-PB..... for HS822 regulator

Features Include:

1. The seat and ball design uses the highest grade of stainless steel and features no rubber seats to swell or distort from impurities or chlorine in the water.
2. No problematic plastic pins. Cumberland nipples use a stainless steel upper pin for water flow control, which means longer life and a more precise flow rate.
3. Easier toggle action than the competitor which means better performance.
4. A lower drinking cavity holds water in view for easy access and provides a bigger drink each time.
5. Better O-ring placement means the cap cannot stick in the saddle when the valve is removed.
6. Superior vibration resistance means Cumberland is less likely to drop water when bumped by the birds.
7. A high-grade Acetal plastic cap & body give longer life.
8. Cumberland nipples control water flow at the top of the valve, away from the pecking action that can cause excessive wear and wet floors.
9. Cumberland nipples can be used as a direct replacement for other valves, thanks to the USA standard J-Lock and Twin-Lock mount.
10. The Cumberland system features ABS pipe with light blocking additives that prevent light penetration that could promote algae growth.

Twin-Lock

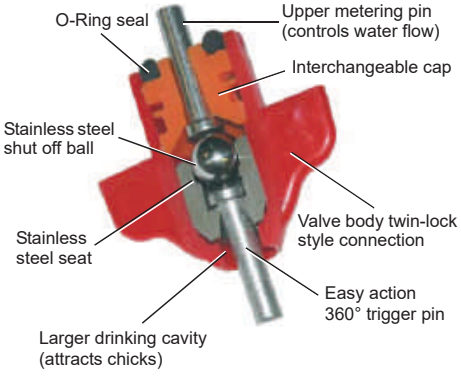

J-Lock

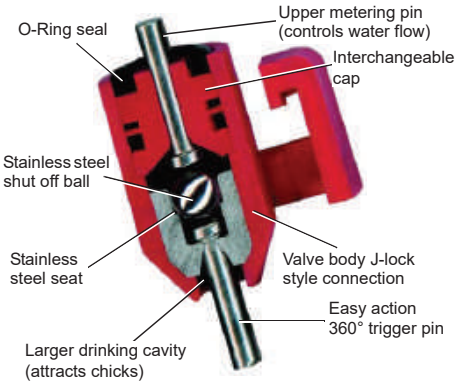

Cumberland Nipples Carry a 10-year Manufacturer Prorated Warranty:

0 to 3 years – no cost to end-user
3 to 5 years – end-user pays 25%
5 to 7 years – end-user pays 50%
7 to 10 years – end-user pays 75%

REGULATOR

Item#	Description
GCW-3030	Regulator

RISER VENT ASSEMBLY B/A

Item#	Description
GCW-9510	Riser Vent Assembly

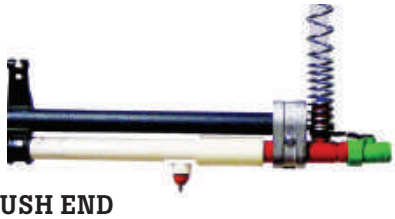

FLUSH END

Item#	Description
GCW-9500	Flush End

REPLACEMENT PIPE ONLY, 10′

Item#	Description
GCW-6000-8J	8″ OC, J-Lock
GCW-6000-8T	8″ OC, Twin-Lock
GCW-6000-10J	10″ OC, J-Lock
GCW-6000-10T	10″ OC, Twin-Lock
GCW-6000-12	12″ OC, J-Lock

CUMBERLAND NIPPLES

Item#	Description
GCW-10233	J-Lock Purple Cap
GCW-10233T	Twin-Lock Purple Cap
GCW-9440	J-Lock Orange Pin Dual Stage Hi Flow

ALUMINUM SUPPORT PIPE CLAMP ASSEMBLY

Item#	Description
GCW-9178	Clamp Assembly

⚠ WARNING:
This product can expose you to chemicals, including nickel, which is known to the State of California to cause cancer and birth defects or other reproductive harm. For more information, go to www.P65Warnings.ca.gov

HANGER FOLDING

Item#	Description
GCW-10008	Hanger Folding

HANGER CLIP FOR ALUMINUM SUPPORT

Item#	Description
GCW-9227	Hanger Clip

⚠ WARNING:
This product can expose you to chemicals, including nickel, which is known to the State of California to cause cancer and birth defects or other reproductive harm. For more information, go to www.P65Warnings.ca.gov

WRENCH FOR NIPPLE

Item#	Description
GCW-2064	Wrench for Nipple

FLOAT BALL

Item#	Description
600-015	Float Ball

CONNECTOR ASSEMBLY

Item#	Description
GCW-5020	Connector Assembly

SHUT OFF ASSEMBLY

Item#	Description
GCW-5065	Shut Off Assembly

#VR150 #VR150H

LAYER DRINKER NIPPLE

Item#	Description
VR150	Roaster Drinker Nipple
VR150H	Roaster Nipple Drinker High Flow

BROILER DRINKER NIPPLE

Item#	Description
VB150	Broiler Drinker Nipple

REGULATOR FLUSH KIT

Item#	Description
VRFV160K	Regulator Flush Kit

ALUMINUM CONNECTOR

Item#	Description
VA317	Aluminum Connector 8"

⚠WARNING:
This product can expose you to chemicals, including nickel, which is known to the State of California to cause cancer and birth defects or other reproductive harm. For more information, go to www.P65Warnings.ca.gov

NIPPLE TOOL

Item#	Description
VT888	Nipple Tool

CLIP ALUMINUM PIPE & HANGER

Item#	Description
VA500	Clip Aluminum Pipe Clip Val
VA600	Clip Hanger Aluminum

CONDUIT THIN WALL

Item#	Description
VA318	1" X 10' 1.163 OD

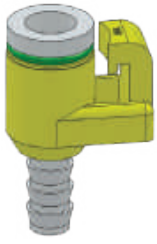

DRINK ADAPTER

Item#	Description
VM101	Mini Drink Adapter

ADAPTER

Item#	Description
VC143	Adapter Square to Round

3/4" COUPLER WITH O-RING

Item#	Description
VC145	3/4" Coupler w/ O-Ring

SADDLE STANDARD

Item#	Description
VS146	Saddle Standard
VS147	Saddles w/ barbs cage watering pullet

#VW1 #VW2

WINCHING CLAMP

Item#	Description
VW1	Winching Clamp and Anit Roost Clamp
VW2	Winching Clamp

⚠WARNING:
This product can expose you to chemicals, including nickel, which is known to the State of California to cause cancer and birth defects or other reproductive harm. For more information, go to www.P65Warnings.ca.gov

PIPE

***Call for Available Sizes**

Item#	Description	Use
60342-10C	Pipe PVC SCH 40 3/4" X 10' Clear	For building and repairing site tube
60341-10C	Pipe PVC SCH 40 1/2" X 10' Clear	For building and repairing stand pipe

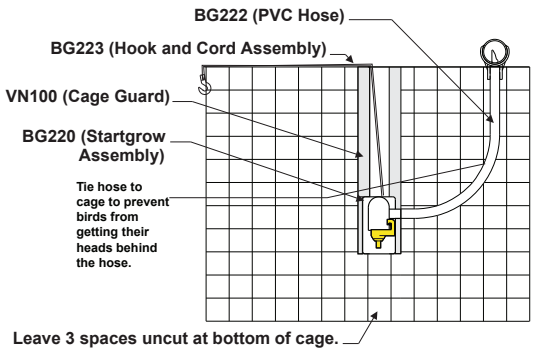

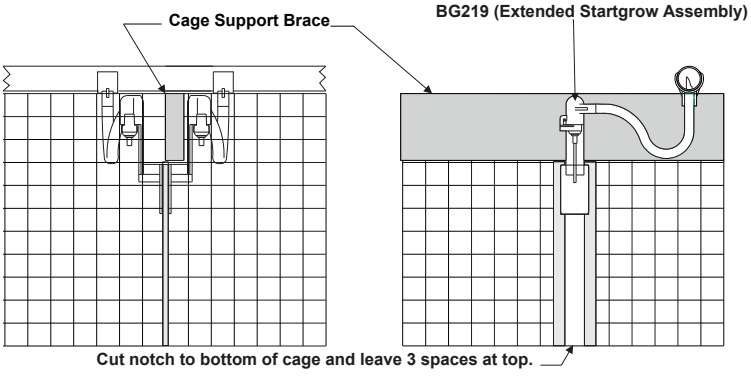

CAGE FLUSH END ASSEMBLY

Item#	Description
VE123	End Assembly w/ 12" Rigid Standpipe
VE124	End Assembly w/ 18" Rigid Standpipe
VE124F	End Assembly w/ 18" Flex Standpipe

Item#	Description
VE125	End Assembly w/ 24" Rigid Standpipe
VE125F	End Assembly w/ 24" Flex Standpipe

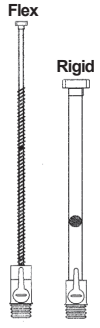

STAND PIPE TUBE KIT

Item#	Description
VSP18FS	18" Flex Kit w/ Shut Off, Ball, Cap, Spring
VSP24FS	24" Flex Kit w/ Shut Off, Ball, Cap
VSP30FS	30" Flex Kit w/ Shut Off
VSP12RS	1/2" Rigid Kit w/ Shut Off
VSP18RS	18" Rigid Kit w/ Shut Off, Ball, Cap
VSP18RK	8" Rigid Kit w/ intake
VSP24RS	24" Rigid Kit w/ Shut Off, Ball, Cap
VSP30RO	30" Rigid Kit w/ Fold, Ball, Cap
VSP36RP	36" Rigid Tube Only

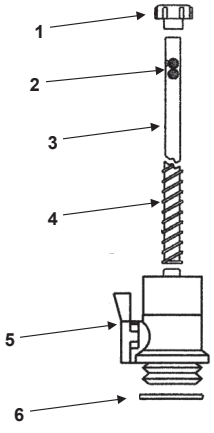

STAND PIPE TUBE KIT

Item#	Description
1) VC025	Auto Shutoff Cap for Flex Standpipe
1a) VSC251	Cap Only for VC025
1b) VSC252	Seal for VC025
1c) VSC250	Body Only for VC025
2) VRP03F	Blue Standpipe Ball
CLEAR TUBE ONLY – CAP BODY NOT INCLUDED	
3) VSP18FP	18" Clear Flex Tube Only
VSP24FP	24" Clear Flex Tube Only
VSP30FP	30" Clear Flex Tube Only
4) VS130	Spring for 18" Flex Standpipe
VS132	Spring for 24" & 30" Flex Standpipe
5) VRP43	Shutoff for Flex Standpipe
6) VO145	O-Ring for 3/4" Couplings

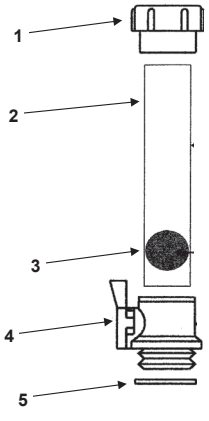

RIGID STAND PIPE

Item#	Description
1) VC075	Auto Shutoff Cap for Flex Standpipe
1a) VSC751	Cap Only for VC075
1b) VSC752	Seal for VC075
1c) VSC750	Body Only for VC075
RIGID TUBE ONLY – CAP BODY NOT INCLUDED	
2) VSP12RP	12" Rigid Clear Pipe Only
VSP18RP	18" Rigid Clear Pipe Only
VSP24RP	24" Rigid Clear Pipe Only
VSP30RP	30" Rigid Clear Pipe Only
VSP36RP	36" Rigid Clear Pipe Only
3) VRP03F	Blue Standpipe Ball
4) VRP44	Shutoff for Rigid Standpipe
5) VO145	O-Ring for 3/4" Couplings

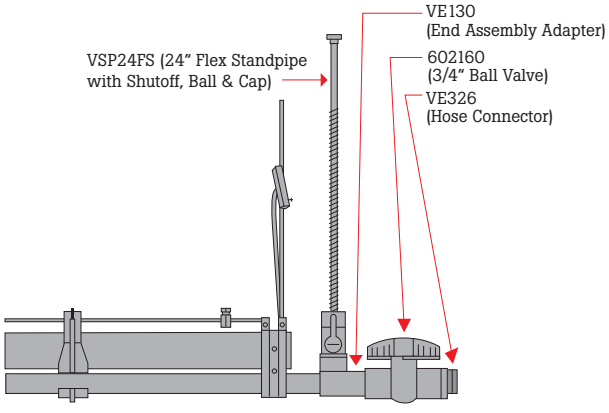

FLOOR FLUSH END ASSEMBLY

Item#	Description
VE323F	Flush End Assembly w/ 18" Flex Standpipe
VE323	Flush End Assembly w/ 18" Rigid Standpipe
VE324	Flush End Assembly w/ 24" Rigid Standpipe
VE324F	Flush End Assembly w/ 24" Flex Standpipe
VE330	Flush End Assembly w/ 30" Rigid Standpipe
VE330F	Flush End Assembly w/ 30" Flex Standpipe
VE336	Flush End Assembly w/ 36" Rigid Standpipe

STARTGROW

Item#	Description
VBG220	Startgrow Assembly
VBG219	Extended Assembly
VBG223	Hook & Cord Assembly
VBG222	Green PVC Hose

DRINKER MINI WITH PLASTIC ADAPTOR

Item#	Description
L4060C	Drinker Mini w/ Plastic Adaptor
L4060-SO	Drinker Mini w/ SS Nipple Adaptor

SNAP CUP AND EXTENSION

Item#	Description
L4017	Snap Cup and Extension

REGULATOR

See Parts Diagram page 65

Item#	Description
L3201-00	Flush Regulator Kit w/ sight tube

SHUT-OFF MIDLINE

Item#	Description
L302-4-22-01	22mm Pipe Aluminum
L302-6-28-02	for 28mm Pipe w/ Flush

MIDLINE BREATHER

Item#	Description
L302-4-22	18" for 22mm Pipe

SHUT-OFF MIDLINE (NEW STYLE)

Item#	Description
L302N	Shut Off Midline New Style

FLUSH BREATHER UNIT

Item#	Description
L4255-6-00	w/ 24" standpipe

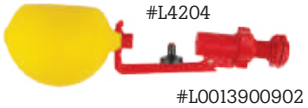

#L4204

#L0013900902

FLOAT ASSEMBLY

Item#	Description
L4204	Float assembly
L0013900902	Ball
L0013902525	Pivot Arm Assembly w/o Ball

CRIMPING TOOL

Item#	Description
L4414	Crimping Tool

⚠ WARNING:
This product can expose you to chemicals, including nickel, which is known to the State of California to cause cancer and birth defects or other reproductive harm. For more information, go to www.P65Warnings.ca.gov

FLOAT BALL

Item#	Description
L0013701900	Large Red Float Ball, 10 mm
L0013701903	Small Red Float Ball, 8 mm

EXPANSION CONNECTORS

Item#	Description
L4367	Connector w/ ring, 20mm
L4363	Expansion Connector w/ crimp, 22mm
L4368	Expansion Connector w/ crimp, 28mm

#L4363

CRIMP RINGS & WASHERS

Item#	Description
L316-3BR	for L4363
L286-7RD	for L4367
L4215	Washer for Lubing Hose Fitting

#L286-7RD #L316-3BR #L4215

⚠ WARNING:
This product can expose you to chemicals, including nickel, which is known to the State of California to cause cancer and birth defects or other reproductive harm. For more information, go to www.P65Warnings.ca.gov

NIPPLES

- Breeder nipples have straight vertical action.
- Broiler nipples have 360º action.

Item#	Description
L4071	Breeder Nipple
L4077	Regular Flow SS Nipple
L4078	Regular Flow Combi Plastic/SS Nipple
L4023	Hi Flow SS Nipple

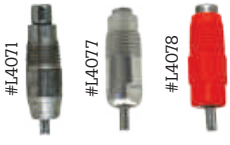

#L4071 #L4077 #L4078

⚠ WARNING:
This product can expose you to chemicals, including nickel, which is known to the State of California to cause cancer and birth defects or other reproductive harm. For more information, go to www.P65Warnings.ca.gov

GROMMET

Item#	Description
IM10027	for impex 10011 & 10026

PUSH IN NIPPLE

Item#	Description
IM10011	SS w/ Grommet

NIPPLE BOOSTER

Item#	Description
IM10026-B	Push In Straight Body

UPGRADE YOUR EXISTING SYSTEM WITH THE LUBING ADVANTAGE

The Lubing modular design makes it easy to retrofit the Lubing Advantage to your existing watering system without replacing railings, regulators and end assemblies.

• Start with OptiGROW nipples mounted in a 10′ pipe section.

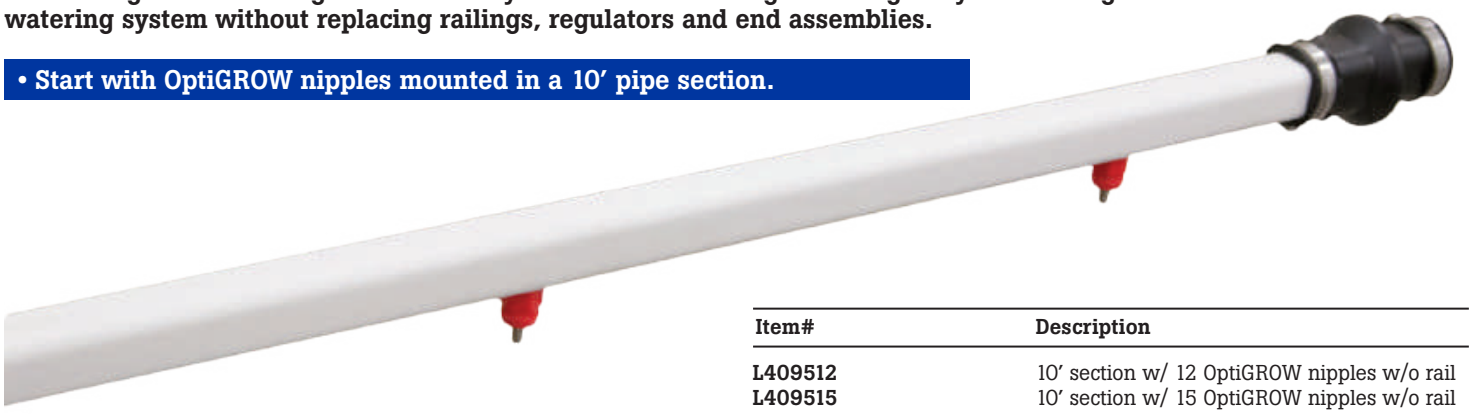

Item#	Description
L409512	10′ section w/ 12 OptiGROW nipples w/o rail
L409515	10′ section w/ 15 OptiGROW nipples w/o rail

• Add the Hanger Brackets according the type of existing support rail. (5) brackets for every 10′ section, except with a Chore-Time® system where (6) clips are required.

Item#	Description
L4327	Hanger for Ziggity®

Item#	Description
L00620120	Hanger for Plasson®

Item#	Description
L00220590	Hanger for Chore-Time®

• Add LitterGard™ Cups

Item#	Description
L4617	Two Arm Large
L4612	Two Arm Small
L4622-01	Single Arm

• Square to Round Transition to attach square Lubing pipe to existing regulators.

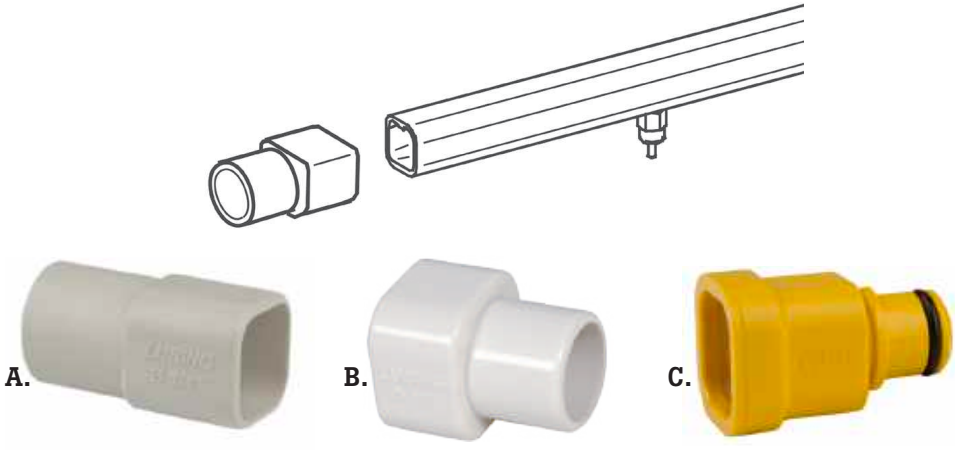

Key	Item#	Description
A	L43810	Square to Round Adapter Transition 22mm x 3/4″ PVC
B	L4383	Square to Round Adapter 28mm to 3/4″ PVC
C	L3304-00	Transition Adapter 28mm to 22mm

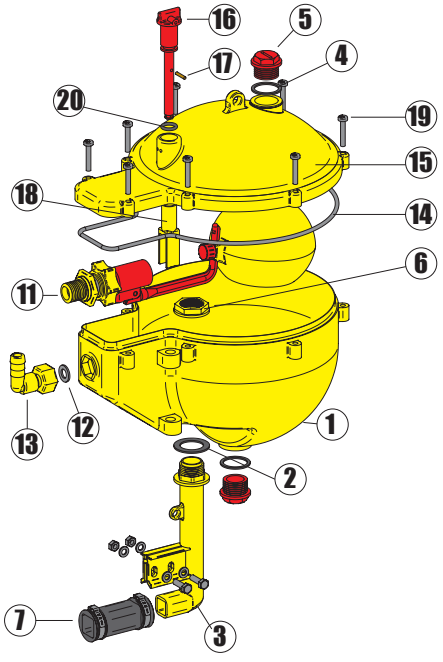

BALL TANK WITH FLUSH SYSTEM #L4221

Item#	Description
1) L0013800300	Tank
2) L4212	Rubber Washer 3/4" Male Thread
3) L0302402800	Outlet with Holder
4) L0013701800	Washer 3/4"
5) L0013702901	Male Plug 3/4" Red
6) L0013801601	Plastic Nut
7) L4367	Tube Connector
11) L4254	Ball Valve
12) L4215	Washer 1/2" Inside
13) L4313	Angle Hose Connector w/ Sleeve Cap Nut
14) L0013802000	Form O-Ring
15) L0013800400	Cover
16) L0013801100	Flush Knob
17) L2707041	Cylinder Screw 3mm x 16 DIN 7
18) L0013801200	Guide Piece
19) L2384052	Raised Cheese Screw M5 x 30 DIN 7985
20) L3002480	O-Ring 12 x 3

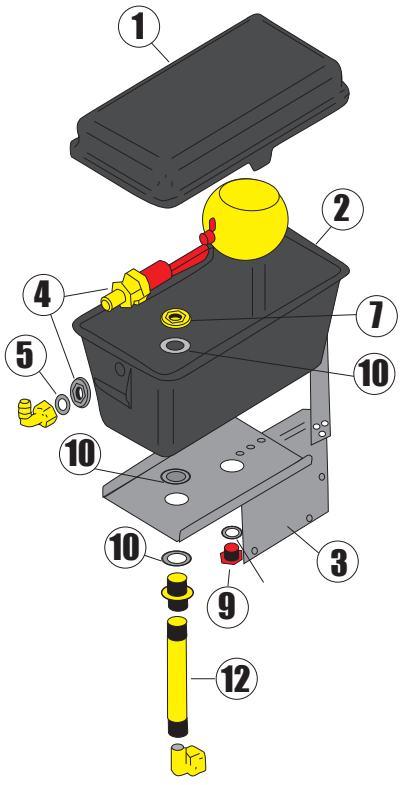

BLACK TANK WITHOUT FLUSH SYSTEM #L4210

Item#	Description
1) L4201-2	Water Tank Cover
2) L4251-1	Tank Shell with Plug & Sticker
3) L0302000200	Tank Bracket (4210)
4) L4204	Float Assembly Complete
5) L4215	Rubber Washer 3/4" Male Thread
7) L0013801601	3/4" Flat Nut
9) L4216	1/2" Tank Plug
10) L4212	Rubber Washer 3/4" Male Thread
12) L3002	Supply Tube Complete (Includes #'s 11, 12, 13)
13) L4210	As Shown Complete

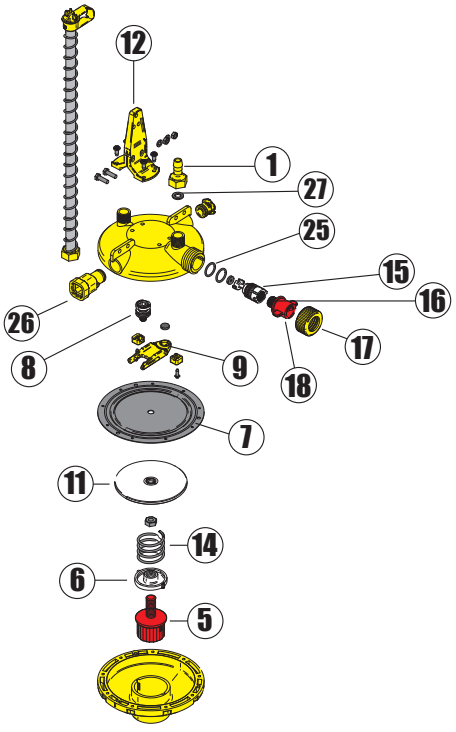

PRESSURE REGULATOR #L3201-00

Item#	Description
1) L4311-00	Hose Connector
5) L0302402200	Adjustment Wheel
6) L0302402300	Adjustment Nut
7) L0302401300	Diaphragm
8) L0302402500	Lever Operation
9) L0302402600	Valve Lever
11) L0302402400	Diaphragm Plate
12) L3301-00	Hanger for Regulator
14) L0302403300	Pressure Spring
15) L302002900	Flush Bordering
16) L0302403601	Adjusting Mechanism
17) L0302403701	Holder Nut
18) L0302403800	Toggle
25) L3006203	O-Ring 20 x 2.5
26) L3303-00	Transition Piece Complete
27) L4215	Washer 1/2" Inside
L7600120400	Bracket for Regulator

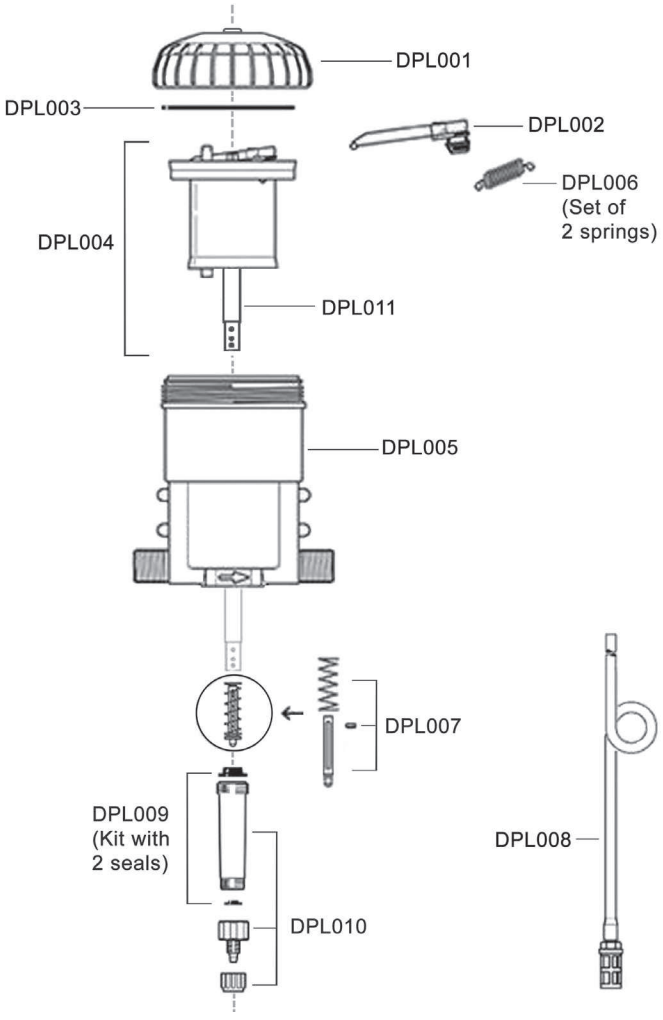

DPLH128 MEDICATOR

#DPLH128
Connection Size: 3/4" NPT
Unit Weight: 3 lbs
Dimensions: 11.25" x 6.5"
Operating Flow: 1/3 Pint/Min to 11 GPM
Pressure: 4.3 to 85 PSI
Ratio: 1:128
Dilution Rate: 1 oz/gal
Maximum Temperature: 104°F
Accessories: Clear suction tube, mounting bracket, weighted strainer, quick start guide

DPLH128 REPLACEMENT PARTS

Item#	Description
#DPL001	Lid, Black
#DPL004	Assembly Piston Assy And Plunger
#DPL005	Body, Black
#DPL007	Kit With Sleeve Valve Spring And Pin
#DPL008	Assembly Suction Hose
#DPL009	Kit With Top And Bottom Seals
#DPL010	Kit With Black Stem Barb And Hose Nut

ASSEMBLY SUCTION HOSE

#DPL008

SLIDE VALVE KIT

Replacement slide valve kit for Hog Slat medicator pump. Includes slide valve, spring and pin.

#DPL007

⚠WARNING:
This product can expose you to chemicals, including nickel, which is known to the State of California to cause cancer and birth defects or other reproductive harm. For more information, go to www.P65Warnings.ca.gov

SEALS KIT

Replacement top and bottom stem seals for the Hog Slat Medicator pump. 2-pack (1 top & 1 bottom seal). Pump stem not included.

#DPL009

PUMP STEM KIT

Replacement pump stem kit for the Hog Slat Medicator pump. Includes pump stem, barb and hose nut.

#DPL010

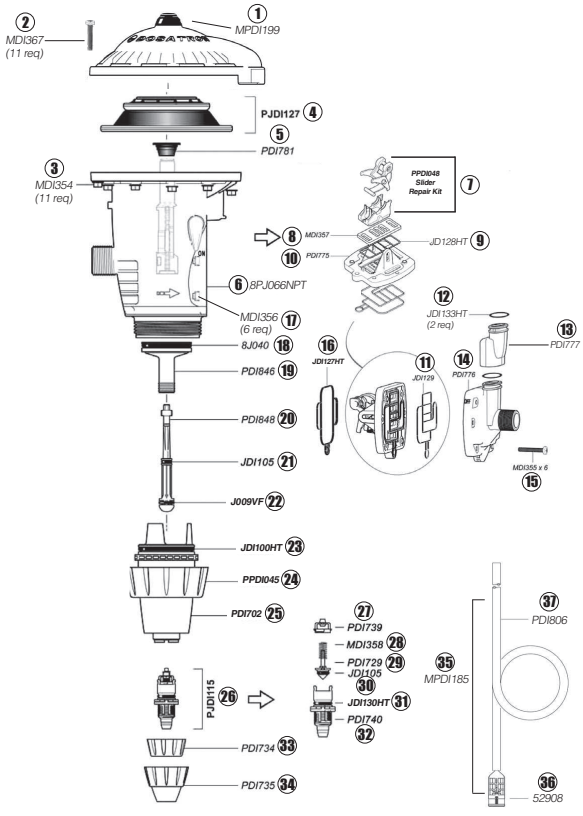

DOSATRON
WATER POWERED DOSING TECHNOLOGY

DM11F DIAPHRAGM #DM11F

The DM11F uses a completely redesigned hydraulic motor that is piston-free, which allows the medicator to work properly even in environments with sand, algae, or high mineral content in the water supply. The DM11F also features a highly chemical resistant housing to allow for use of a wide range of chemicals, including pH water treatment chemicals and other substances commonly used to combat bio-film.

- Maximum Flow: 11 GPM
- Minimum Flow: 0.02 GPM
- Injection Percents: 0.8%
- Injection Ratios: 1:128 Fixed
- Pressure Range: 1.5-85 psi
- Connections: 3/4" NPT

SLIDER REPAIR KIT
#PPDI048

Replacement Slider Kit for Dosatron DM11F. Includes Slider, Blade and Rocker.

LOWER END REPAIR KIT
#PJDI900LS

Repair kit for the Dosatron® DM11F lower end to replace the most common wear parts.

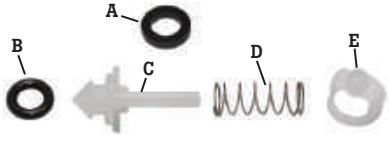

Kit Includes:
A) J009VF Plunger Seal
B) JDI105VF Check Valve Cone O-Ring
C) PDI729 Valve Cone
D) MDI358 Check Valve Spring
E) PDI739 Top Guide
- Packet of Medicator RX
- 2.5 gram packet of Dosa-Lube

DM11F REPLACEMENT PARTS

Item#	Description
1) MPDI199	Cap Assembly
2) MDI367	Screw
3) MDI354	Nut
4) PJDI127HT	Diaphragm
5) PDI781	Plastic seal for diaphragm
6) PDI771	Body
7) PPDI048	Slider Repair Kit
8) MDI387	Actuator plate
9) JDI128HT	Actuator gasket
10) PJDI125HT	Actuator subassembly & gasket
11) JDI129HT	Actuator gasket
12) JDI133HT	O-ring seal for actuator (2 req)
13) PDI777	Upper transfer body
14) PDI776	Transfer body
15) MDI355	Screw
16) JDI127HT	Transfer body gasket
17) MDI356	Nut
18) 8J040HT	O-ring for isolation body
19) PDI846	Isolation body
20) PDI848	Plunger
21) JDI105VT	Plunger o-ring top
22) J009VF	Plunger seal bottom
23) JDI100HT	O-ring for stem body
24) PD1702	Top stem nut
25) PPDI045	Injection stem assembly
26) PJDI115HTAF	Check valve assembly
27) PDI739	Check valve cap
28) MDI358	Check valve spring
29) PDI729	Check valve cone
30) JD105VT	O-ring for check valve cone
31) JDI130HT	O-ring for hose barb
32) PDI740	Hose barb
33) PDI734	Nut for check valve
34) PDI735	Lower stem nut
35) MPDI185	Hose assy. 5/16", DM11F
36) 52908	Strainer for 5/16" hose, DM11F
37) PDI806	Hose

NEW!

DOSATRON
WATER POWERED DOSING TECHNOLOGY

D40MZ2 Medicator

The D40MZ2 replaces the D8RE2 high capacity medicator with an improved piston and 63% fewer replacement parts. Its 40 GPM flow rate handles the needs of large multi-house sites. The exterior sleeve regulates the injection rate from 1:50 to 1:500.

- Flow range: 2.2 - 40 GPM
- Adjustable ratio: 1:500 to 1:50
- Percentage Range: 0.2 to 2%
- Pressure: 2 to 110 psi
- Size: 25-1/4" x 8-1/2"
- 1-1/2" NPT inlet/outlet

#D40MZ2 ..... 40 GPM Medicator

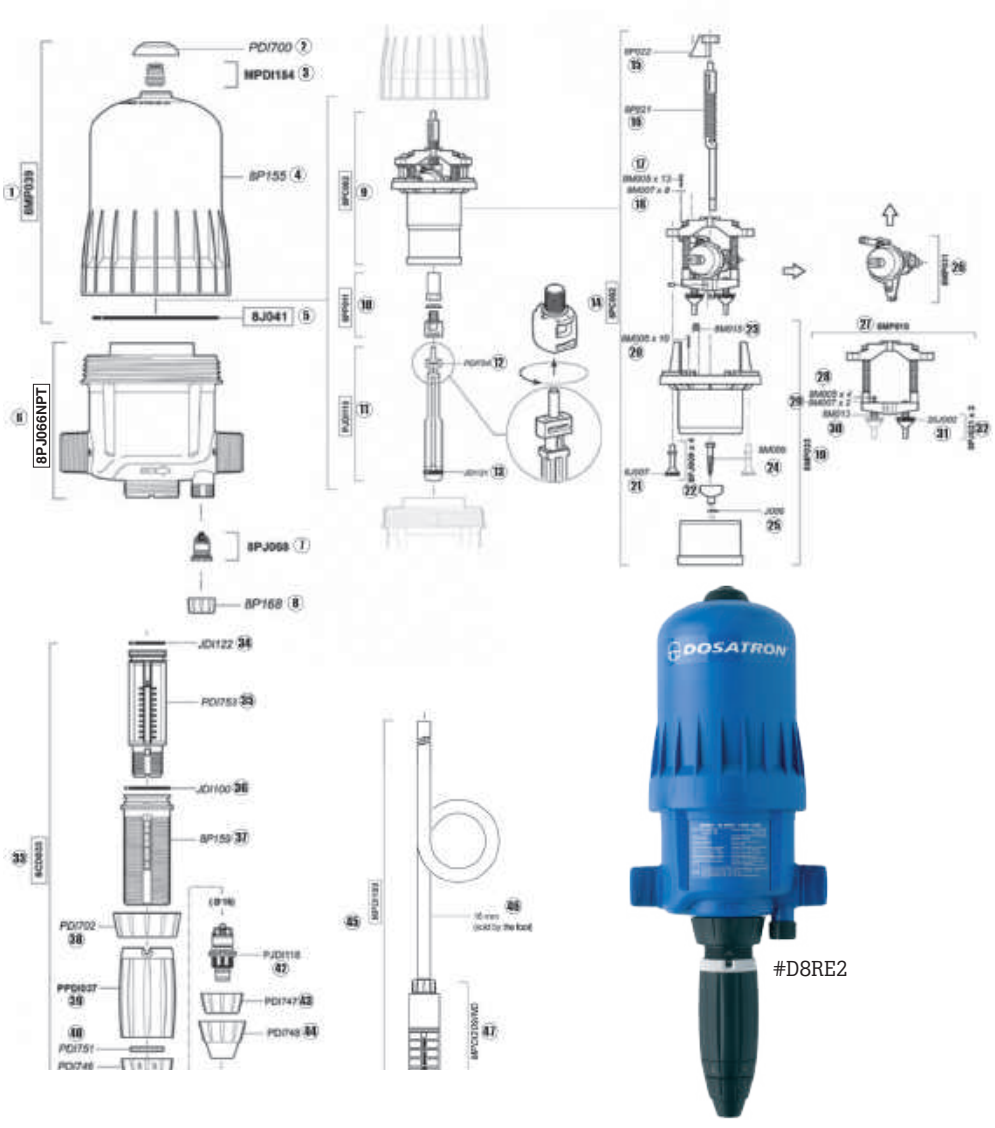

D8RE2 REPLACEMENT PARTS

Item#	Description
1) 8MP039	Bell housing assy. w/air bleed O-ring
2) PDI700	Air bleed cap
3) MPDI184	Air bleed
4) 8P155	D8RE2 Bell housing -New model
5) 8J041	Bell housing O-ring
6) 8PJ066NPT	Equipped pump body sub assy. w/diffuser US version
7) 8PJ068VF	Sub-assy vaccum breaker
8) 8P168	Nut
9) 8PC002	Rack guide
10) 8PP011	Sub assy. piston fastening adapter
11) PJDI119VF	Plunger piston sub-assy. + seal VF
12) PDI754	Plunger
13) JDI121VF	Plunger seal VF
14) 8PC002	Motor sub-assy. without plunger rod

Item#	Description
15) 8P022	Rack guide
16) 8P021	Rod with rack
17, 20, 28) 8M005	Screw for piston
18, 29) 8M007	Washer
19) 8MP033	Motor piston SHELL sub assembly
21) 8J007	Piston O-ring
22) 8PJ009	Upper valve assy. for piston + seal EP
23) 8M015	Toggle spring
24) 8M006	Draw Bolt
25) J006VF	O-ring seal VF
26) 8MP031	Barrel sub assy.
27) 8MP010	Valve bearing sun assy.
30) 8M013	Spring
31) 20J002VF	O-ring seal
32) 8PJ031	Lower valve assy. for piston + seal EP
33) 8CD033VF	Complete injection assy. VF
34) JDI122VF	Injection stem O-ring Seal VF
35) PDI753	Injection stem

Item#	Description
36) JDI100VF	Sleeve O-ring VF
37) 8P159	Graduated injection sleeve
38) PDI702	Injection stem nut
39) PPDI037	Adjusting ring w/eyelet
40) PDI751	Anti-rotation ring
41) PDI746	Blocking ring
42) PJDI118VF	Suction valve sub-assy. VF
43) PDI747	Suction valve nut
44) PDI748	Hose nut
45) MPDI189	Suction hose assy. 16mm
46) 16MM	Suction hose 16mm (sold by the foot)
47) MPDI209IND	Strainer/foot valve 16mm
NS) MPDI196	Complete by-pass sub assy.
NS) 8P044	Wall bracket
NS) 8EM003	Motor seals set
NS) 20J002	O-ring seal
NS) 8J041	Bell housing O-ring
NS) PJDI120VVF	Injection seals Kit V VF + suction valve + barbed fitting

1)

#E128.....Etratron 1:128 Medicator
#SCP8006871.....Pump head
#KRA0007021-1.....Injection and foot filter valve kit

2)

#SVA0834023.....Injection valve
#KRA0007021-1.....Injection and foot filter valve kit

3)

#SFT0832021.....Foot filter
#KRA0007021-1.....Injection and foot filter valve kit

Replacement Tubing/per foot

4) #ATU0004202-1.....PVC 6x8 mm suction tube
5) #DUT0000006-1.....4x6 mm priming tube
6) #ATU0000603-1.....PE 6x8 mm discharge tube

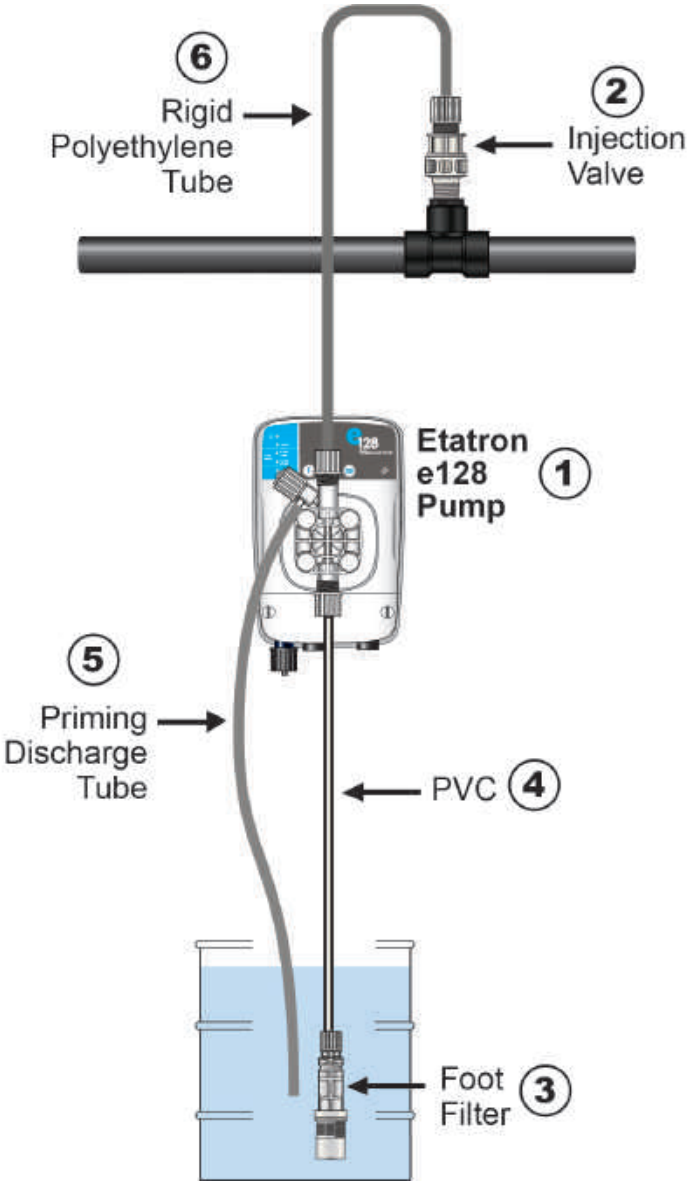

Replacement Tubing Kit

- Injection valve and foot filter
- 6 x 8 mm PVC and polyethylene tubing

#SCO0031021.....Replacement tubing kit

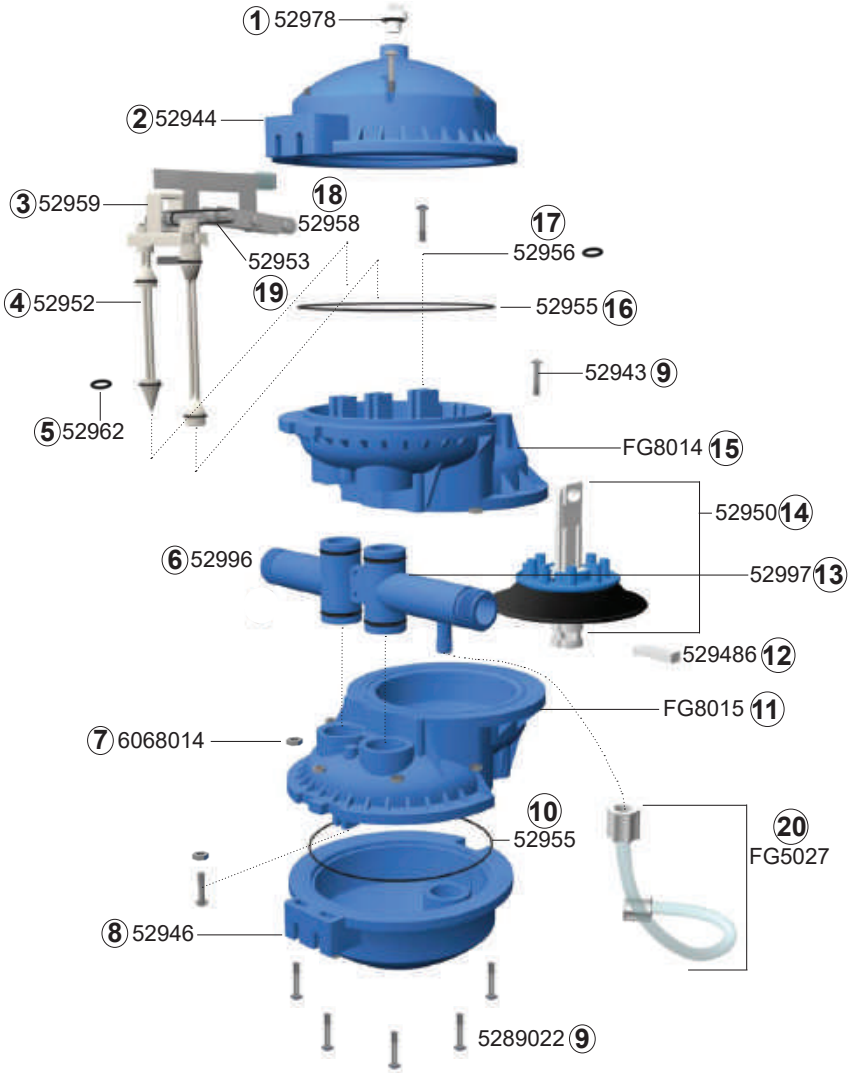

Chemilizer

HN55 MEDICATOR

WATER MOTOR

- Has no sliding piston to wear out.
- Is not affected by chemicals since they are injected directly into the water line for mixing.
- The HN55 Water Motor is now so advanced, we have less than 1% return on warranty claims. Many of these units have been in the field for six years without service problems.

CHEMICAL PUMP

- Twists in and out of water motor.
- Easy maintenance.

CH9000-209 .....HN-55 Medicator, Fixed, 1:128
HN55ADJ ... HN-55 Medicator, Adjustable, 1:50-1:168

WATER MOTOR PARTS

Item#	Description
1) 52978	Twist air vent
2) 52944	Top cap
3) 52959	Actuator arm
4) 52952	I/O valve
5) 52962	O-ring 109
6) 52996	Assembly for Inlet Tee
7) 6068014	10-32 nut
8) 52946	Bottom cap
9) 5289022	10-32 stainless steel screw
11) FG8015	Main body assembly
12) 529486	Motor piston clip
13) 52997	Assembly for Outlet Tee
14) 52950	Diaphragm assembly
15) FG8014	Body assembly top
16) 52955	O-ring 159
17) 52956	O-ring 009
18) 52958	Pivot arm
19) 52953	Tension ring
20) FG5027	Medication hose assembly

CHEMILIZER PUMPS

Item#	Description
1A) FG9209-V	Fixed 1:128
1B) FG9210-V	Fixed 1:100
2) 10095989	Adjustable 2%-0,6%, 1:50-1:64
3) 10095982	Adjustable 5%- 1.6%, 1:20-1:64

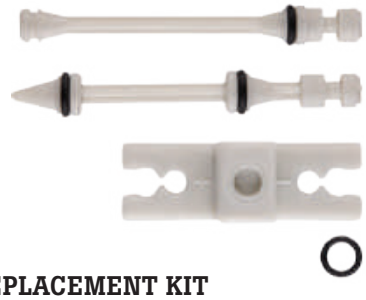

REPLACEMENT KIT FOR I/O ASSEMBLY

Item#	Description
52952	Replacement Kit for I/O Assembly

NEW-STYLE PUMP REBUILD KIT

Item#	Description
OR9409-V	1:128
OR9410-V	1:100

SLEEVES

Item#	Description
A) 10095071	Ceramic Sleeve
B) 10097374	Kynar Sleeve

STENNICATOR PUMP

Compact electrical unit accepts a pulse from a dry contact water meter and injects directly into the water line. Unaffected by water quality, scale or solids. Stock solution does not contact any moving parts. Includes 10' cord.

- Flow range: 2.7 Ounces per Minute
- Flow ratio: Fixed 1:128
- Pressure: Up to 80 psi
- Size: 5.4" x 4.4" x 5.9"

#E20MH81S

ECON INTEGRATOR DIGITAL PUMP

This unit is an adjustable version of the popular Stennicator pump and is activated by a dry contact water meter with an output relay to monitor water consumption. It can be used with an existing water meter used with house controllers. Eliminates dilution of liquid chemicals such as hydrogen peroxide, chlorine and acids. Includes 10' power cord.

- Flow range – .5 to 30 gpd
- Available as 4.5, 16 and 30 gallons/day units
- Adjustable in 1% increments
- Size: 5.4" x 4.4" x 5.9"

Item#	Description
E20RHF81S	4.5 gpd
E20RHG81S	6 gpd
E20RHH81S	30 gpd

CLASSIC SINGLE HEAD ADJUSTABLE PUMP #45MJH2A1S

Electromechanical, versatile, self-priming pump.

45MHP10 Model

- Output: 0.5 to 10.0 GPD
- Output Adjustment: 20:1, 1% increments
- Pressure: To 100 psi
- Size: 10.6" x 5.3" x 6.0"

STENNER CHLORINE PUMP #85MJH2A1S

- 120V
- Adjustable from 5% to 100% in 2.5" increments
- Max output 17 gallons per days

CLASSIC TUBE KIT (2/PACK) HIGH PRESSURE

- Includes Duckbill

Item#	Description
UCCP1FD	Tube Kit #1, 3 gpd
UCCP2FD	Tube Kit #2, 10 gpd
UCCP7FD	Tube Kit #7, 40 gpd

STENNICATOR AND INTEGRATOR TUBE KIT

Item#	Description
EC30F-2	Integrator Pump F tube / 4.5 gpd
EC30G-2	Integrator Pump G tube / 16 gpd
EC30H-2	Stennicator Pump and Integrator Pump H tube / 30 gpd

SUCTION/DISCHARGE TUBING

- 20' rolls

Item#	Description
AK4002B	1/4", UV black
MALT02B	3/8", UV black
AK4002W	1/4", white
SPMALT002	3/8" white

CHECK VALVE DUCKBILL

Item#	Description
UCCVDBO	2-pack

ROLLER ASSEMBLY

Item#	Description
EC350	Integrator white (F tube/ 4/5 gpd)
EC351	Stennicator and Integrator, black (G tube/ 16 gap & H tube/ 30 gpd)

CLASSIC SERIES FEED RATE CONTROL SERVICE KIT

- For classic single head adjustable pump

#SFSK1

1/4" INJECTION CHECK VALVE

#UCDBINJ

1/4" FLOW INDICATOR WITH BRACKET

Visual reference to confirm solution is pumping; bracket (not shown) secures vertical installation.

#AK600

SPIN-DOWN™ Sediment Filters

- Clear Cover is easily removed for total cleaning (No tools required*)
- Flow capacity for entire system
- Sediment is visible through the clear cover indicating when the filter needs cleaning
- Sediment is quickly and easily removed by opening the ball valve at the bottom of the filter cover
- Reusable polyester and stainless steel element screens in many mesh sizes
- No down time

*Using tools voids warranty

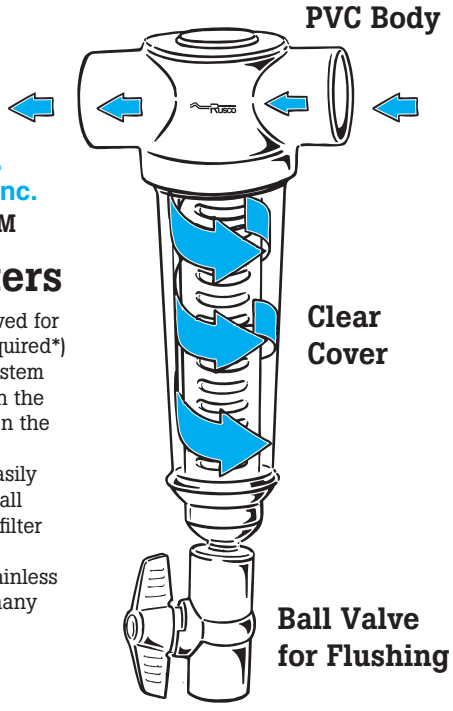

RUSCO SPIN-DOWN® FILTERS, T-STYLE

Incoming water swirls around the filter housing, flows through the screen center, and out the discharge port. Heavier sediment drops to the bottom and is easily flushed out by opening the ball valve. Includes Filter with cartridge screen and ball valve.

Item#	Port Size (slip)	Mesh	Flow/gpm
61007	1″	60	1-25
61008	1-1/2″	60	10-50
610085	1-1/2″	12	10-50
61009	2″	100	18-100

RUSCO SPIN-DOWN® REPLACEMENT CARTRIDGES, FILTER HOUSINGS & O-RINGS

Item#	Description
1″ Cartridge	
60107	60 Mesh, Polyester Screen
601071	100 Mesh, Polyester Screen
610082	140 Mesh, Polyester Screen
601072	250 Mesh, Polyester Screen
601074	500 Mesh, Polyester Screen
1-1/2″ Cartridge	
60110	60 Mesh, Polyester Screen
610086	100 Mesh, Polyester Screen
610083	140 Mesh, Polyester Screen
601100	250 Mesh, Polyester Screen
2″ Cartridge	
60123	60 Mesh, Polyester Screen
601231	100 Mesh, Polyester Screen
610232	140 Mesh, Polyester Screen
610092	250 Mesh, Polyester Screen
Filter Housing	
60104	1″
60109	1-1/2″
60121	2″
Housing O-ring	
60108	1″
60112	1-1/2″
60125	2″

RUSCO SPIN-DOWN® FILTERS, L-STYLE

Includes polyester screen.
Ball valve (602151) sold separately.

Item#	Port Size (slip)	Mesh	Flow/gpm
61008-24L	1-1/2″	24	10-50

Item#	Description
Replacement 1-1/2″ cartridges, polyester screen	
60110L	60 mesh
610086L	100 mesh
610083L	140 mesh
601100L	250 mesh
Replacement housing & O-ring	
60112L	1-1/2″ O-ring
610088L	1-1/2″ clear housing

RUSCO SUN-SHIELD

#SS1-5

Black sun-shield for Rusco™ 1-1/2″ Spin-Down filter housings. Slips over filter housing to prevent sun damage and the formation of algae. Black neoprene construction.

1/2″ THREADED BALL VALVE #602151

Replacement ball valve for flushing Spin-Down filters.

Y-SHAPED LINE STRAINER

Fiberglass reinforced poly housing with female NPT ports. Stainless steel screen with clean out plug. Max 150 PSI.

Item#	Description
LS200-30	2″, 30 mesh
LS150-12	1-1/2″, 12 mesh

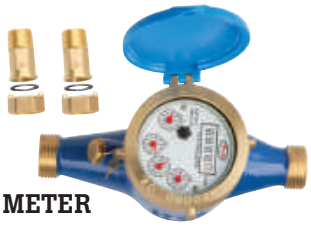

3/4" WATER METER
#HSWMNP

This cold water meter is rated for 1/4 to 20 GPM flow rates. Includes 3/4" Male NPT coupling. Frost resistant bronze body with epoxy coating to avoid pinholes. Large pointer dial registers low flow rate by 1/10 of gallon. Tempered glass lens with plastic lid. Unit can be installed horizontal or vertical. For non-potable water.

⚠ WARNING:
This product can expose you to chemicals, including lead, which is known to the State of California to cause cancer and birth defects or other reproductive harm. For more information, go to www.P65Warnings.ca.gov

3/4" WATER METER W/ PULSE

This cold water meter is rated for 1/4 to 20 GPM flow rates. Includes 3/4" Male NPT coupling. Frost resistant bronze body with epoxy coating to avoid pinholes. Large pointer dial registers low flow rate by 1/10 of gallon. Tempered glass lens with plastic lid. Unit can be installed horizontal or vertical. Equipped with 1 gallon pulse output fully compatible with most house ventilation controls. For non-potable water.

Item#	Description
HSWMPLS	5/8" x 3/4" Water Meter w/Pulse
WM-ACC-RS	Reed Switch w/lead wire

⚠ WARNING:
This product can expose you to chemicals, including lead, which is known to the State of California to cause cancer and birth defects or other reproductive harm. For more information, go to www.P65Warnings.ca.gov

GrowerSELECT

PRESSURE REGULATOR #HS762

The GrowerSELECT regulator provides constant water flows even at low pressure settings to reduce water wastage. Rugged corrosion-proof housing is impervious to rust, corrosion and medications.

- Adjustable 10–25 pressure setting.
- Includes sight gauge
- 3/4" MPT fittings
- Max 50 psi input pressure

BIBB HOSE

- 3/4" plastic

Item#	Description
60243P	3/4" Plastic Hose Bibb
60242P	1/2" Plastic Hose Bibb

BADGERMETER
#BADGERMETER

- Lead Free Cast bronze housing
- Operating range 1/2 to 25gpm
- Sealed thermoplastic measuring chamber w/disc meter
- Couplings shown are not included

WATER METER COUPLING

- Adapts water meter to standard 3/4" pipe threads

Item#	Description
601021	Coupling 3/4" – Pair (2)
H1021-6035	Fitting Bronze 3/4" (sold each)
DI73WM059	Bronze Couplers 1" – Pair (2)

MAXIFLO PRESSURE REGULATOR

Provides constant even flow of water with adjustable output. Also incorporates a check valve to prevent back flow.

- Max Water Temp.: 100°
- Max Water Pressure: 300 psi
- Inlet 1/2" MPT Outlet 3/4" MPT
- Methven model #6003
- Adjustable 1–13 psi (preset at 5 psi)
- High impact plastic housing

Item#	Description
52787	6001 (1/4 to 3 psi)
DI52788	6002 (3/4 to 8 psi)
61037	6003 (1-1/2 to 13 psi)

BRASS WATER PRESSURE REDUCER

Designed to reduce high inlet pressures to a workable lower outlet pressure. Balanced internal piston smooths out rapid pressure fluctuations.

- Cast bronze body w/ SS internal parts
- Max Water Temp.: 180°
- Max Water Pressure: 300 psi
- 3/4" Threaded Connections

Item#	Description
0009589	Adjustable 25–75 psi (preset at 50)
634461	Adjustable 0–50 psi (preset at 30)

⚠ WARNING:
This product can expose you to chemicals, including lead, which is known to the State of California to cause cancer and birth defects or other reproductive harm. For more information, go to www.P65Warnings.ca.gov

POLY TOP BRASS PRESSURE VALVE

Automatically controls excessive water pressure to protect water systems components. Thermoplastic cage provides maximum corrosion resistance. Bottom clean out port allows access to seat disc and strainer.

- Max Supply Pressure: 400 psi
- Max Set Pressure: 125 psi
- 3/4" Threaded Connections

Item#	Description
36C10401	Apollo Poly Top, 25–75 psi
36C10402	Apollo Poly Top, 10–35 psi

⚠ WARNING:
This product can expose you to chemicals, including lead, which is known to the State of California to cause cancer and birth defects or other reproductive harm. For more information, go to www.P65Warnings.ca.gov

RUBBER AND BRAIDED HOSE

Item#	Description
4511-0251	Braided Hose – 1/4" ID – Clear
4511-0381	Braided Hose – 3/8" ID – Clear
565611	Rubber Hose – 3/8" ID – Red
60254	Rubber Hose – 5/8" ID – Black
60255	Rubber Hose – 3/4" ID – Black
60256	Rubber Hose – 1" ID – Black
52771	1/2" Garden Hose, per foot
4103-0050-328	1/2" Heavy duty red water hose
15935	Garden Hose 5/8" x 50' hose w/ fittings
AP98108804	Hose Water 3/4" x 50' MxF GHT Heavy Duty (AG200)
AP98108809	Hose Water 3/4" x 100' MxF GHT Heavy Duty (AG200)
4511-0751	Braided Hose – 3/4" ID – Clear

REED SWITCH

- for HSWMPLS 1 GPP Water Meter

#WM-ACC-RS

PRESSURE GAUGE

- 1/4" NPT • 2" dial

Item#	Description
61042	0–15 psi
61038	0–30 psi
52759	0–100 psi
52854	0–200 psi
527593	0–300 psi

OZARK FILTER HOUSING

- Dimensions: 13-5/8" high x 5-1/2" wide
- 3/4" NPT inlet/outlet ports
- Max Temp.: 125°
- Max Pressure: 125 psi
- Uses 2.5" Dia. by 9-3/4" to 10" long cartridges with flow rates from 1 to 10 gpm

Item#	Description
3MBPI-1C	Ozark Filter Housing (no filter)

FILTER HOUSINGS

Polypropylene housing with black cap and pressure release valve. Leak-proof seal with top-seated Buna O-ring. Max pressure 125 psi.

#PWP3-25SHC1034H

Item#	Port Size (NPT)	Housing Size	Body Color
PWP3-25SHB1034H	3/4"	2.5"x 10"	Blue
PWP3-25SHC1034H	3/4"	2.5"x 10"	Clear

WATTS®

PURE WATER FILTER HOUSING

Constructed of FDA grade polypropylene cap with clear acrylic styrene housing.

- Dimensions: 11.8" high x 4.72" wide
- 3/4" inlet/outlet ports
- Max Temp.: 125°
- Max Pressure: 125 psi

Item#	Description
60359	Watts Water Housing (no filter)

WATTS®

BIG BUBBA® NON-METALLIC FILTER HOUSINGS

The Big-Bubba filter housings are made of rugged glass-reinforced polypropylene so they will not chip, rust, or dent. Big-Bubba filters have two outlets (2" slip) on opposite sides to allow more flexibility with piping configurations. Overall height is 40" with a 12" width. Maximum flow rate is 150 gpm with maximum working pressure of 125 psi.

Item#	Description
HE7100301	Big Bubba Jumbo Water Filter Cartridge Housing Only
HE7100305	Filter Pleated 20 Micron for Big Bubba Filter

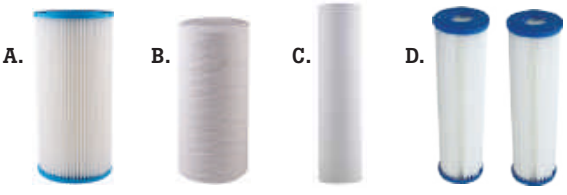

A) PLEATED CARTRIDGES

Item#	Size	Material	Micron
PWP2-251020-PP	2-3/8" x 10"	Polyester	20
PWP2-451050-PP	4.5" x 10"	Polyester	50

B) STRING WOUND CARTRIDGES

Item#	Size	Material	Micron
603602	2.5" x 10"	Polypropylene	5
601014	2.5" x 10"	Polypropylene	10
PWP2-251020-SW	2-3/8" x 10"	Polypropylene	20
PWP2-251020-SW	2.5" x 10"	String Wound Sediment	20
EP20X9-78P	2-3/8" x 9.78"	Polypropylene	20
60360-1	2.5" x 9.75"	Polypropylene	20
60360	2.5" x 10"	Polypropylene	20
TSWR1952	4" x 10"	Polypropylene	20
603603	4.5" x 10"	Polypropylene	20
PWP2-451020-SW	4.5" x 10"	Polypropylene	20
601015	2.5" x 10"	Polypropylene	30
EP50X9-78P	4.5" x 9.78"	Polypropylene	50

C) SPUN FILTER

Item#	Size	Material	Micron
603600	2.5" x 10"	Polypropylene	50
PWP2-451005-PP	4.5" x 10"	Polypropylene	5

D) WASHABLE CORRUGATED FILTER

Item#	Size	Material	Micron
603601-2 (sold as pair)	2.5" x 9-7/8"	Polyester	20

JUMBO BLUE FILTER WATER HOUSING

Jumbo Blue housing is manufactured from reinforced polypropylene and utilizes larger 4" diameter filter.

- 1-1/2" inlet/outlet ports
- Max Temp.: 125°
- Max Pressure: 100 psi

Item#	Description
TS106414	Jumbo Filter Blue (no filter)
TS106415	Wrench for Large 4" Filter

BIG BLUE WATER FILTER

Item#	Description
RFFH5000BL1PR	Housing, 1" Inlet/Outlet, 10" x 4.5"
K155B	O-Ring 10" x 4.5"

4-WAY
(slip x slip x slip x slip)

Item#	Description
60366	1/2"
60367	3/4"
60368	1"
60369	1-1/4"
60370	1-1/2"
60371	2"

COUPLING
(slip x slip)

Item#	Description
60015	1/2"
60025	3/4"
60035	1"
60045	1-1/4"
60055	1-1/2"
60065	2"
60075	3"

TEE
(slip x slip x slip)

Item#	Description
60010	1/2"
60020	3/4"
60030	1"
60040	1-1/4"
60050	1-1/2"
60060	2"
60070	3"

TEE
(slip x slip x fpt)

Item#	Description
60011	1/2"
60021	3/4"
60031	1"
60041	1-1/4"
60051	1-1/2"
60061	2"
600701	3"

90° ELBOW
(slip x slip)

Item#	Description
60012	1/2"
60022	3/4"
60032	1"
60042	1-1/4"
60052	1-1/2"
60062	2"
60072	3"

45° ELBOW
(slip x slip)

Item#	Description
60013	1/2"
60023	3/4"
60033	1"
60043	1-1/4"
60053	1-1/2"
60063	2"
60073	3"

END CAP

Item#	Description
60018	1/2"
60028	3/4"
60038	1"
60048	1-1/4"
60058	1-1/2"
60068	2"
60078	3"

BALL VALVE
(slip x slip)

Item#	Description
60215	1/2"
602160	3/4"
602170	1"
602180	1-1/4"
602190	1-1/2"
602201	2"
60258	3"

MALE ADAPTER
(slip x mpt)

Item#	Description
60017	1/2"
60027	3/4"
60037	1"
60047	1-1/4"
60057	1-1/2"
60067	2"
60071	3"
60412	3/4" x 3/4"

FEMALE ADAPTER
(slip x fpt)

Item#	Description
60016	1/2"
60026	3/4"
60036	1"
60046	1-1/4"
60056	1-1/2"
60066	2"
60076	3"

IN-LINE CHECK VALVE

Item#	Description
602166	3/4" valve, SxS
60403	2"
527458	1-1/2" for Cool Cell

REDUCING TEE (slip x slip x slip)

Item#	Description
600301	1"x1"x 3/4"
600511	1" x 1/2" x 1-1/2" x 3/4"

BARB TEE (slip x slip x barb)

Item#	Description
600211	3/4" x 3/4" x 3/4"

20' SCH 40 PVC

Item#	Description
60341	1/2"
60342	3/4"
60343	1"
603461	1-1/2"
60348	2"
60351	3"

PIPE STRAP

Item#	Description
60019	1/2" PVC
60029	3/4" PVC
60039	1" PVC
60059	1-1/2" PVC
60069	2" PVC
60079	3" GALV

PVC PIPE CUTTER
• Cuts up to 1-1/4" pipe

Item#	Description
PW8-PCT158MH	metal handle
PW8-PCT158RH	rubber handle

⚠WARNING:
This product can expose you to chemicals, including nickel, which is known to the State of California to cause cancer and birth defects or other reproductive harm. For more information, go to www.P65Warnings.ca.gov

PVC PRIMERS, GLUES AND CLEANERS

⚠WARNING:
This product can expose you to chemicals, including nickel, which is known to the State of California to cause cancer and birth defects or other reproductive harm. For more information, go to www.P65Warnings.ca.gov

Key	Item#	Description
1	16810145	Primer/Glue Multi Pack, 4 oz.
	30890	Oatey Rain R Shine PVC Cement 4 oz.
	30891	Oatey Rain R Shine PVC Cement 8 oz.
2	16813594	Oatey Rain R Shine PVC Cement 16 oz.
3	602445	PVC Cement, Clear, Heavy bodied for PVC, 8 oz. can
4	602446	PVC Cleaner, Rectorseal Clear, 8 oz. SAM CL-3L Low VOC
5	602455	Polar Weld, 1 quart
6	602451	Rectorseal Hot Blue Pint
7	602462	Rectorseal Hot Blue Quart

MANURE BELTS

- Available in custom sizes
- Call to order

Questions on Manure Belt?
Call: 641-426-6849

PART #	MATERIAL	WIDTH x LENGTH	THICKNESS
HSMBC921-300	Poly Manure Belt	32.00" x 300'	1.00mm
HSMBC924-640	Poly Manure Belt	34.00" x 640'	1.20mm
HSMBC922-1050	Poly Manure Belt	38.00" x 1050'	1.00mm
HSMBC915-1000	Poly Manure Belt	38.75" x 1000'	1.00mm
HSMBC903-1180	Poly Manure Belt	40.125" x 1180'	1.00mm
HSMBC919-510	Poly Manure Belt	40.375" x 510'	1.00mm
HSMBC907-1040	Poly Manure Belt	40.50" x 1040'	1.00mm
HSMBC908-800	Poly Manure Belt	40.75" x 800'	1.00mm
HSMBC910-850	Poly Manure Belt	41.00" x 850'	1.00mm
HSMBC910-1040	Poly Manure Belt	41.00" x 1040'	1.00mm
HSMBC913-900	Poly Manure Belt	41.50" x 900'	1.00mm
HSMBC923-1050	Poly Manure Belt	42.00" x 1050'	1.00mm
HSMBC916-1040	Poly Manure Belt	45.00" x 1040'	1.00mm
HSMBC904-1180	Poly Manure Belt	46.25" x 1180'	1.00mm
HSMBC925-1040	Poly Manure Belt	46.50" x 1040'	1.00mm
HSMBC926-1040	Poly Manure Belt	47.00" x 1040'	1.00mm
HSMBC914-1200	Poly Manure Belt	47.25" x 1200'	1.20mm
HSMBC901-820	Poly Manure Belt	47.75" x 820'	1.00mm
HSMBC917-960	Poly Manure Belt	48.00" x 960'	1.20mm
HSMBC917-1040	Poly Manure Belt	48.00" x 1040'	1.00mm
HSMBC909-1000	Poly Manure Belt	50.00" x 1000'	1.00mm
HSMBC927-1040	Poly Manure Belt	51.18" x 767.72'	1.00mm
HSMBC911-300	Poly Manure Belt	59.05" x 300'	1.00mm
HSMBCP911-300	Poly Manure Belt Perforated	59.05" x 300'	1.00mm
HSMBC905-1295	Poly Manure Belt	59.25" x 1295'	1.00mm
HSMBC902-780	Poly Manure Belt	59.50" x 780'	1.00mm
HSMBC920-600	Poly Manure Belt	60.00" x 600'	1.00mm
HSMBC912-1000	Poly Manure Belt	60.00" x 1000'	1.00mm
HSMBC906-1000	Poly Manure Belt	61.80" x 1000'	1.20mm
HSMBC918-1246	Poly Manure Belt	89.76" x 1246.72'	2.00mm

PART #	MATERIAL	WIDTH x LENGTH	THICKNESS
HSMBC1122-1000	Poly Manure Belt	44.17" x 1000'	1.00 mm
HSMBC1585-1000	Poly Manure Belt	62.4" x 1000'	1.20 mm
HSMBC-1985-1000	Poly Manure Belt	78.15" x 1000'	1.20 mm
HSMBC5325-780	Poly Manure Belt	53.25" x 780'	1.20 mm
HSMBC902-850	Poly Manure Belt	59.5" x 850'	1.00 mm
HSMBC907-900	Poly Manure Belt	40.5" x 900'	1.00 mm
HSMBC917-1240	Poly Manure Belt	48" x 1240'	1.00 mm
HSMBC925-875	Poly Manure Belt	46.5" x 875'	1.00 mm
HSMBC928-950	Poly Manure Belt	70" x 950'	1.20 mm
HSMBC929-1000	Poly Manure Belt	46" x 1000'	1.00 mm
HSMBC930-1000	Poly Manure Belt	38.625" x 1000'	1.00 mm
HSMBC931-985	Poly Manure Belt	37" x 985'	0.055 mm
HSMBC932-985	Poly Manure Belt	41" x 985'	0.055 mm
HSMBC933-985	Poly Manure Belt	41.75" x 985'	0.055 mm
HSMBC934-1000	Poly Manure Belt	48" x 1000'	0.04 mm
HSMBC935-875	Poly Manure Belt	45.5" x 875'	1.00 mm
HSMBC936-1040	Poly Manure Belt	47.5" x 1040'	0.04 mm
HSMBC937-1100	Poly Manure Belt	52" x 1100'	0.04 mm
HSMBC938-1000	Poly Manure Belt	59" x 1000'	0.04 mm
HSMBC939-850	Poly Manure Belt	58.75" x 850'	0.045 mm
HSMBC940-1000	Poly Manure Belt	49.5" x 1000'	0.04 mm
HSMBC941-1000	Poly Manure Belt	60.5" x 1000'	0.045 mm
HSMBC942-1000	Poly Manure Belt	64.5" x 1000'	0.045 mm
HSMBC943-1000	Poly Manure Belt	71.5" x 1000'	0.045 mm
HSMBC995-1000	Poly Manure Belt	39.17" x 1000'	1.00 mm
HSMBCP912-500	Poly Manure Belt Perforated	46" x 500'	1.00 mm
HSMBCP913-450	Poly Manure Belt Perforated	70" x 450'	1.20 mm

ULTRASONIC POULTRY SYSTEMS - P100R EGG & MANURE BELT WELDER

Ultrasonic Poultry Systems has made poultry belt welders for years and is pleased to introduce our new rugged and easy to use system. The P100R egg and manure belt welder is designed to withstand harsh environments better and make belt welding that much faster and easier.

Key Advantages:
- Interchangeable Tips – change in seconds and are made from Titanium for increased longevity.
- Protected – contained in a military grade crushproof case.
- Corrosive Airborne Particulates – cannot enter system.
- Controlled Welds – take less than three seconds.
- Wide Power Range – Works with almost any AC power available (see more below)
- Warranty – One-year parts & labor

Specifications
- Power Supply Weight: 6lbs.
- Handgun Weight: 1lb. - Compact design allows for use in hard-to-reach places
- Power Supply Dimensions: 10.6" x 9.6" x 4.8"
- Power Requirements: 80-264 VAC/47-63Hz
- Cable Length: 5'

Item#	Description
UPSP100R-KIT	P100R & G100R Wrenches Manual Case & H6 Tip

ULTRASONIC POULTRY SYSTEMS - P500R EGG & MANURE BELT WELDER

For higher power applications, the P500R egg and manure belt welder is the solution. Maximum power delivers 500 watts to the weld joint to create a superior bond. If you're looking for the strongest bond possible, look no further than the P500R ultrasonic welder from Ultrasonic Poultry Systems.

Key Advantages:
- Interchangeable Tips – change in seconds and are made from Titanium for increased longevity.
- Protected – contained in a military grade crushproof case.
- Corrosive Airborne Particulates – cannot enter system.
- Controlled Welds – take less than three seconds.
- Warranty – One-year parts & labor

Specifications
- Power Supply Weight: 10lbs
- Handgun Weight: 1.5lbs - Compact design allows for use in hard-to-reach places
- Power Requirements: 120VAC/60Hz
- Dimensions: 14.2" x 6.5" x 11.4"
- Cable Length: 10'

Item#	Description
UPSP500R-KIT	P500R & G500R Wrenches Manual & M50 Tip

MANURE SCRAPER CABLE

STAINLESS STEEL

ITEM#	SIZE	DIA	REAKING STRENGTH
617281	7x19	3/16"	3,700 lbs.
617281-250	7x19 250'	3/16"	3,700 lbs.
617281-500	7x19 500'	3/16"	3,700 lbs.
617281-1000	7x19 1000'	3/16"	3,700 lbs.
61728-1200	7x19 1200'	3/16"	4,200 lbs.
61728-1300	7x19 1300'	3/16"	4,200 lbs.
617281-1600	7x19 1600'	3/16"	4,200 lbs.
617291	7x19	1/4"	6,400 lbs.
617276	7x19	5/16"	9,000 lbs.

GALVANIZED

ITEM#	SIZE	DIA	BREAKING STRENGTH
61728	7x19	3/16"	4,200 lbs.
61728-250	7x19 250'	3/16"	4,200 lbs.
61728-500	7x19 500'	3/16"	4,200 lbs.
61728-1000	7x19 1000'	3/16"	4,200 lbs.
617281-1355	7x19 1355'	3/16"	4,200 lbs.
61729	7x19	1/4"	7,000 lbs.
61729-100	7x19 100'	1/4"	7,000 lbs.

⚠ WARNING:
This product can expose you to chemicals, including nickel, which is known to the State of California to cause cancer and birth defects or other reproductive harm. For more information, go to www.P65Warnings.ca.gov

ELECTRIC HIGH TORQUE FARM MOTOR

- (TEFC) Totally Enclosed Fan cooled motor
- Meets or exceeds NEMA service factors.
- Manual Overload Protection
- Gasketed capacitor cases and conduit boxes provide protection in all environments.
- Double sealed ball bearings that are lubricated and designed for high operating temperature.
- Rubber boot over manual protector reset button provides weather protection.
- Low temperature manual overload protects against extreme overload.
- High and extra high starting torque ratings.
- UL Listed and CSA certified.

⚠ WARNING:
This product can expose you to chemicals, including nickel, which is known to the State of California to cause cancer and birth defects or other reproductive harm. For more information, go to www.P65Warnings.ca.gov

ITEM#	HP	RPM	FRAME	VOLTAGE	F.L. AMPS	SHAFT SIZE	PHASE	WT.
LE113290-00	1/3	1800	56C	115-208/230	3.2	5/8"	1	28

#LE19334960

#VR12A

#HS9303

MANURE DRYING MOTORS

LE19334960:
- Cast iron frame construction
- 60/50 Hz interchangeability
- B3, B5, B14 mounting flanges
- Inverter rated (IRIS™) insulation system on AC models
- 3-year warranty on premium efficiency models
- UL listed and CSA certified

⚠ WARNING:
This product can expose you to chemicals, including nickel, which is known to the State of California to cause cancer and birth defects or other reproductive harm. For more information, go to www.P65Warnings.ca.gov

ITEM#	HP	RPM	FRAME	VOLTAGE	F.L. AMPS	SHAFT SIZE	PHASE	USE
VR12A	1/2	825	48Y	115/220	7.0/3.5	5/8"	1	JD Box/Pit Fan and 36" Windstorm
HS9303	1/2	825/715	48Y	230/460	2.4/1.2	5/8"	3	JD Box/Pit Fan
LE19334960	1-1/2	1800	56C	230/460	2.4	5/8"	3	Motor Leeson Manure Dryer

FAR-PUL® HD® BELT CLAMPS

#LSHD30 #LLSHD48

Far-Pul® HD® clamp bars are constructed from heat-treated extruded aluminum so they resist corrosion and won't seize up in wet and corrosive environments. Clamps include adjustable steel scissors.

Size/Weight
- Belt Width: Up to 30in, Up to 750mm
- Weight: 79.0 lbs., 35.8 kgs.

Aluminum Content
- Aluminum Alloy Type: 6061

Percent
- Magnesium (Mg): 1.00%
- Titanium (Ti): 0%

THE PERFORMER MR

Digital Poultry House Dimmers

- Keypad adjusts light level more accurately than rotary dial
- Independent control of two separate circuits
- Full timer function with manual override
- Digital display
- 7200 W, 120 V, 60 Hz

Item#	Description
PLS-7200	PLS-7200 7200 Watt
PLS-MR4-M-LED	Manual Dimmer for LED bulbs PLS-2400
PLS-MR4-PTC-LED	Auto Dimmer for LED Bulbs With Auto Controller PLS-2400

#PLS-7200

#PLS-MR4-PTC-LED

greenlite

Greenlite Shatterproof LED Bulbs

- Up to 25,000 hour lamp life
- Shatterproof Globe
- Damp Location Approved
- Specifically engineered for harsh agricultural environments.
- Rated for agricultural use not just residential like many other bulbs.

Item#	Watt	Kelvin	Lumens	Dimmable
44415-4pk	6	3000	480	Yes
42371	6	5000	480	Yes
48506*	9	5000	800	Yes
GL60138	9	3000	NA	No
36259*	12	5000	1200	No
48844*	15	5000	1600	Yes
48586	22	5000	2550	Yes
42364	6	2700	480	No
42370	6	2700	480	Yes
45334	11	3000	1100	Yes
48846*	15	5000	1600	No
48662*	19	5000	2000	No
48810*	25	5000	2550	No
60135*	36	5000	4500	No

**Fully enclosed fixture approved*

Overdrive®

OVERDRIVE DIMMABLE LED BULBS

- Lamp Type: LED A19 Bulb-Diffused Cover
- E26 (Medium Base)
- Expected Live Hours: 40,000
- A19 Shape
- LED Type: 10 nos. x 0.45W - SMD (LM80)
- Reliable Operating Temperature: -40 F to 1130 F
- Color Temperature: 3000K or 5000K
- Lamp Wattage: 6W (60W Incandescent Replacement, based on floor lux)
- Specifically engineered for harsh agricultural environments.
- Rated for agricultural use not just residential like many other LED bulbs.

Item#	Watt	Kelvin	Lumens	Dimmable
731	6	3000	480	Yes
732	6	5000	530	Yes
793	9.5	5000	900	No
792	9.5	2700	810	No
OD733	10	3000	930	Yes
734	10	5000	1000	Yes
665	20	5000	2700	No

GE Silicone

Contractor grade silicone sealant offers excellent adhesion and durability for general purpose caulking applications. Stays flexible over a wide range of temperature extremes. For exterior and interior use to seal wall panels and exterior metal sheeting. Not recommended to paint. Applies white and dries clear.

#003030 ..... White, 10.1 oz. cartridges

NP1

NP1 is a one-component flexible, polyurethane sealant for exterior and interior use. Can be used over a wide temperature range to seal cracks and seams. Can be used in high moisture areas. Available in white and gray.

#59500 ..... White, 10.1 oz. cartridges
#59500G ..... Gray, 10.1 oz. cartridges
#59500B ..... Black, 10 oz. cartridges

AGRISHIFT® MLM-R LIGHT FIXTURE FOR LAYERS AND BREEDERS

- Fully dimmable – daylight simulation
- Red spectrum which optimizes egg production
- Helps maintain circadian rhythms
- Promotes sexual maturity
- Decreases time to peak production

Item#	Description
24-0156	8W 230V

AGRISHIFT® MLL LIGHT FIXTURE FOR LAYERS AND BREEDERS

- New design with higher Lumen output
- Promotes early weight gain
- Enhances flock productivity
- Promotes sexual maturity
- Durable design

Item#	Description
24-0003	12W 120V
24-0023	12W 230V

AGRISHIFT® JLL LIGHT FIXTURE FOR LAYERS AND BREEDERS

- Decrease time to reach peak production
- Reduces stress with sunrise/sunset simulation
- Durable design
- Enhances flocks performance
- Helps maintain circadian rhythms

Item#	Description
24-0061	Tall Lens
24-0060	Short Lens

BIOSHIFT® UV-C CHAMBER

- Increases your farms biosecurity to sanitize everyday objects
- Multiple sizes depending on your application
- Kills viruses and pathogenic organisms in a recommended five minutes
- Easy to use one-button operation
- Chemical-free sterilization

Item#	Description
24-0201	Large Pass-Through UV-C Chamber
24-0200	Small Pass-Through UV-C Chamber
24-0273	Large Single-Door UV-C Chamber
24-0256	Small Single-Door UV-C Chamber
24-0230	Pass-Through UV-C Egg Sanitation Chamber

AGRISHIFT® JLP LIGHT FIXTURE FOR PULLETS

- Promotes healthy bird development
- Reduces Stress
- Durable design
- Helps maintain circadian rhythms

Item#	Description
24-0074	AgriShift® JLP Light Fixture

AGRISHIFT® MLB LIGHT FIXTURE FOR BROILERS AND TURKEYS

- New design
- Improves Feed conversion
- Built with a more durable design
- Brighter light compared to the previous generation

Item#	Description
24-0003	AgriShift® MLB Light Fixture

#OIJLL-FSWR-JB

#OI1012510

#OI30-014-00135

AGRISHIFT JLL SHORT LED FIXTURE

- Advanced LED system optimized for layers
- Mounts in standard watertight 4" junction box
- Replaces 13W U Tube and 8W cold cathode fluorescent lighting fixtures
- Flush mount, 3/4" low-profile fixture
- Corrosion Resistant construction
- Watertight (IP66) highpressure washable
- Meets NEC 547 Code for agricultural buildings
- 5 Year 24/7 warranty

Item#	Description
OIJLL-FSWR-JB	8 Watt
OI1012510	Light LED JJ Mount W/Base Unit Adapter 120V Broiler Dim Blue
OI30-014-00135	Slave Dimmer
OIADAPT-HWUS-02	Adapter Hard Wire Kit Pig Tail for ML Series
OIMLB-FSWR-HW	Bulb LED 12 AgriShift MLB 12W w/ Hard Wire Adapt Dim Blue

AGRISHIFT® MLM-B LIGHT FIXTURE FOR BROILERS, PULLETS, TURKEYS

- Blue spectrum helps bird's development
- Helps create more flock uniformity
- Durable design
- Increases productivity

Item#	Description
24-0119	AgriShift® MLM-B Light Fixture

AGRISHIFT® MASTER AND SLAVE CONTROLLERS

- Numerous scheduling options
- Incremental dimming reduces flocks stress
- Allows more control over your barn's environment

Item#	Description
30-014-00188	Master 120V
30-014-00180-L123	Master 220V
30-014-00189	Slave 120V

PORCELAIN & PLASTIC KEYLESS SOCKETS

Nickel-plated brass screw shell keyless sockets are recommended for dimmable fluorescents to decrease failure rates and improve dimming performance.

Item#	Description
HE612405	Porcelain Socket, 6" lead
EPC16510	Phenolic Plastic Socket, Nickel Plated Brass Screwshell, no lead
EPC16500	Porcelain Socket, Nickel Plated Brass Screwshell, no lead
EPC16524	Phenolic Plastic Socket, Nickel Plated Brass Screwshell, 7" lead
EPC16520	Porcelain Socket, Nickel Plated Brass Screwshell, 7" lead

SCEPTER LIGHT BASE

One piece fixture base constructed of glass reinforced polyester resin. Accepts 3/4" conduit. Porcelain socket with brass insert resists heat buildup. Rated for Maximum 150 watt. 12.8 oz. Ideal for use in the harshest environment. Waterproof.

Item#	Description
10120	Scepter
72231	Replacement porcelain socket

ATTACH-ON SOCKETS

Item#	Description
612445	Standard Socket brass contact
880551	Premium Socket Pin Incandescent Bulbs
EPC16022	Standard Socket nickel contact

LIGHT BASE & LIGHT MOUNT BASE

- Rated at 150 Watt
- Ceiling mount base only
- Threaded
- 8 oz.

Item#	Description
1) FE1059	Base for light, rated at 150W
2) 88092	1/2" Ceiling mount - threaded
10185	3/4" Ceiling mount - threaded
88056	Light base w/ glass globe
880561	Light base w/ 7" plastic globe

DOUBLE GANG TOGGLE SWITCH COVER

Item#	Description
E9G2SSN	Switch Cover, double gang toggle

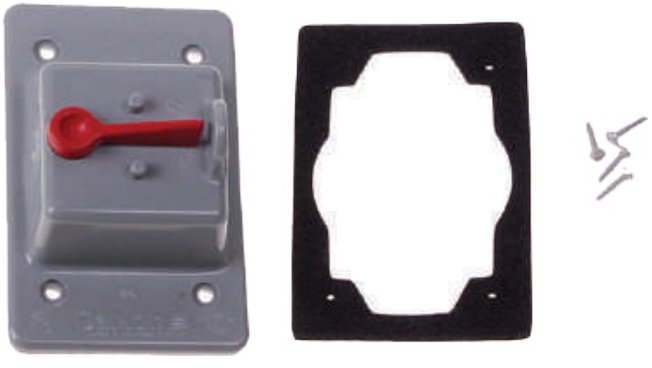

SINGLE GANG TOGGLE SWITCH COVER

Item#	Description
FE59143	Switch Cover, single gang toggle

Straight Blade Plugs

#5266X.....Plug 2-pole 125 Volt, 15 Amp 5-15P
#5466X.....Plug 2-pole 250 Volt, 20 Amp 6-20P

⚠WARNING:
This product can expose you to chemicals, including nickel, which is known to the State of California to cause cancer and birth defects or other reproductive harm. For more information, go to www.P65Warnings.ca.gov

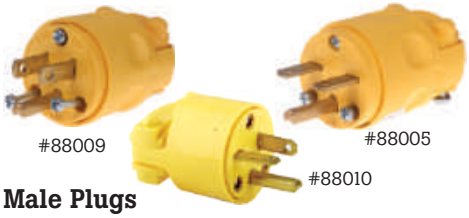

Male Plugs

#88009..... 15-Amp, 120-Volt
#88005.....15-Amp, 220-Volt
#88010..... 20-Amp, 250-Volt

⚠WARNING:
This product can expose you to chemicals, including nickel, which is known to the State of California to cause cancer and birth defects or other reproductive harm. For more information, go to www.P65Warnings.ca.gov

Female Plugs

#88040..... 15-Amp, 120-Volt
#88041 ..... 20-Amp, 240-Volt

⚠WARNING:
This product can expose you to chemicals, including nickel, which is known to the State of California to cause cancer and birth defects or other reproductive harm. For more information, go to www.P65Warnings.ca.gov

Wall Receptacles

#HSEL100106 .....Duplex, 15-Amp, 120-Volt
#HSEL100135.. Crowfoot, 50-Amp, 125/250-Volt, black
#HSEL100125.....Straight blade, 20-Amp, 250-Volt, 6-20R
#HSEL100123.....Twist Lock, single, 15-Amp, 220-Volt

⚠WARNING:
This product can expose you to chemicals, including nickel, which is known to the State of California to cause cancer and birth defects or other reproductive harm. For more information, go to www.P65Warnings.ca.gov

Male Plug Twist & Lock

#L615-P 15-amp, 250V
#L620-P 20-amp, 250V
#L14-20P..... 20-amp, 125/250V
#L630-P 30-amp, 250V

⚠WARNING:
This product can expose you to chemicals, including nickel, which is known to the State of California to cause cancer and birth defects or other reproductive harm. For more information, go to www.P65Warnings.ca.gov

Female Plug Twist & Lock

#L615-C.....15-amp, 250V
#L620-C..... 20-amp, 250V
#L630-C..... 30-amp, 125/250V
#L630-C-30A..... 30-amp, 250V

⚠WARNING:
This product can expose you to chemicals, including nickel, which is known to the State of California to cause cancer and birth defects or other reproductive harm. For more information, go to www.P65Warnings.ca.gov

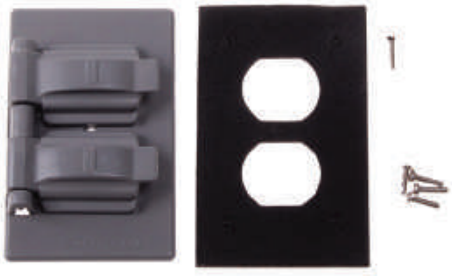

1 Gang Duplex Cover

#S1962 ..... weatherproof vertical/horizontal mount

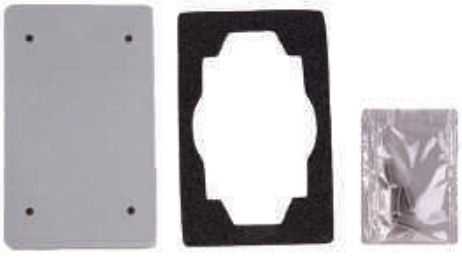

1 Gang Blank Cover

#8802083.....weatherproof w/ 4 SS screws

Switches

#HSEL100022.....Single Pole, 20-Amp, 120-Volt
#HSEL100002..... Single Pole, 15-Amp
#HSEL100024.....Double Pole, 15-Amp
#HSEL100029.....Double Pole, 20-Amp
#HSEL100006.... 3-way, 15-Amp, 120-Volt, ivory

⚠WARNING:
This product can expose you to chemicals, including nickel, which is known to the State of California to cause cancer and birth defects or other reproductive harm. For more information, go to www.P65Warnings.ca.gov

1 Gang Vertical Receptacle Box Cover

#HSEL100234.....weatherproof, 50-Amp
#S1961..... weatherproof, 15-Amp

1 Gang Horizontal Duplex Box Cover

#E98DHGN-CAR..... weatherproof

In Use Weatherproof Receptacle Clear Cover

• Accepts single/double gang

#WP3100C.....GFI, Toggle switch

Duplex/Toggle Switch Box Cover

• 1 gang
• Weatherproof

#E9G2DSN-CAR..... vertical mount, gray

PROXIMITY SWITCH

• for Brock Scale

Item#	Description
59135-020	Proximity switch (shown)
57135-000	Magnetic Switch Actuator for weigh scales (no wires)

SNAP ACTION SWITCH

• for Chore-Time

Item#	Description
EL1056	Chore-Time linear lift switch

UNIMAX SWITCH

• AA-421 with roller

Item#	Description
EL0995	Chore-Time fill system control switch

MICRO SWITCH

• Tall button

Item#	Description
EL0996	Chore-Time hopper switch for C2912

MICRO SWITCH

• for Chore-Time & Cumberland Control Pans

Item#	Description
EL0997	Micro Switch

15 AMP SWITCH

• Harkins Hopper Control Switch

Item#	Description
EL0998	Micro Switch

PUSH SWITCH

• Cumberland GFLX-3802 hopper switch

Item#	Description
EL0999	SPDT manual/automatic

LIMIT SWITCH

• 2 per machine needed

Item#	Description
EL1059	AT Newell curtain machine switch

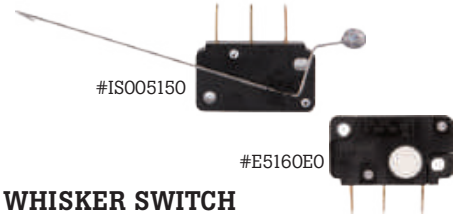

WHISKER SWITCH

• for Spinks & Roxell switch applications

Item#	Description
IS005150	Complete switch
E5160E0	Switch only no whisker

PADDLE SWITCH

• for G07051400 hopper control

Item#	Description
EL1142	Paddle Switch

SWITCH

• Feed Control Pan, Hopper & Fill Control Switch
• Replaces switches: C46678, 6X289, GC2200025

Item#	Description
EL1052	20 Amp (Long Lever)
EL1052M	20 Amp (Short Lever)

TOGGLE SWITCHS

Item#	Description
EL1000	SPST Carling 10 Amp, 250 Volt, 3/4 HP
EL1001	3 prong SPDT w/Ctr Pos 10 Amp, 250 Volt, 3/4 HP, K1406
EL1002	3 prong SPDT 10 Amp, 250 Volt, 3/4 HP
EL1003	3 prong SPDT Tab w/screw 10 Amp, 250 Volt, 3/4 HP
EL1004	4 prong DPST 10 Amp, 250 Volt, 3/4 HP
EL1005	6 prong DPDT w/Ctr off 10 Amp, 250 Volt, 3/4 HP
EL1006	6 prong DPDT 10 Amp, 250 Volt, 3/4 HP
EL1007	TPDT 10 Amp, 250 Volt, 3/4 HP
EL1011	4 prong DPST 20 Amp, 250 Volt, 1-1/2 HP
VSW-026-002	Boot Toggle Switch Silicon

FLEX FLOW SAFETY LIMIT SWITCH

Item#	Description
HSS-7707	Safety Limit Switch

MICRO SWITCH

Item#	Description
EL1141	2 Terminal Micro Switch
EL1067	for Cumberland Plunger Control Pans

CONTACTOR
• Chint Brand

Item#	Description
DP30C2P-1	2-Pole 30-Amp 120 V
DP30C2P-2	2-Pole 30-Amp 240 V

CONTACTOR
• Chint Brand

Item#	Description
5330102	3-Pole 40-Amp 120 V
5330104	3-Pole 40-Amp 240 V

RELAY
• 6-Screw Terminals

Item#	Description
EL1008	25-Amp 240 V DPST
2XC20	25-Amp 120 V DPST

RELAY

Item#	Description
EL1014	DPST 120 V
EL1070	DPDT 240 V

CONTACTOR
• Square D

Item#	Description
5B111	2-Pole 40-Amp 208/240 V
5B112	2-Pole 40-Amp 120 V Coil
5B103	2-Pole 50-Amp 24 V Coil

CONTACTOR
• Square D

Item#	Description
5330105	2-Pole 30-Amp 24 V

CONTACTOR
• Square D

Item#	Description
5B130	1-Pole 25-Amp 120 V

CONTACTOR
• Square D

Item#	Description
5330106	4-Pole 25-Amp 120 VAC

CONTACTOR
• Square D

Item#	Description
5B131	2-Pole 20-Amp 24 VAC

CONTACTOR

Item#	Description
C25DND325B	25-Amp, Panel, 600 V, 3 PST, 3 Pole, 5.5 kW

LB STYLE CONDUIT BODY

Item#	Description
E986E	3/4" rigid non-metallic
E986D	1/2" rigid non-metallic

TYPE C CONDUIT BODY

Item#	Description
101901	1/2" rigid non-metallic
E987E	3/4" rigid non-metallic

T STYLE CONDUIT BODY

Item#	Description
T07	3/4" rigid non-metallic
101902	1/2" rigid non-metallic

45⁰ ELBOW

Item#	Description
UA7AD	1/2" x 450 SCH 40 non-metallic standard rigid
UA7AE	3/4" x 450 SCH 40 non-metallic standard rigid

90⁰ ELBOW

Item#	Description
HSEL200026	1/2" x 900 SCH 40 non-metallic standard rigid
HSEL200027	3/4" x 900 SCH 40 non-metallic standard rigid

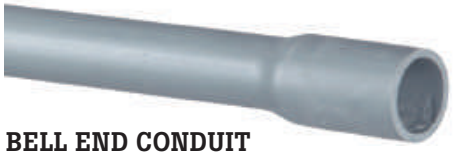

BELL END CONDUIT

Item#	Description
HSEL200002	3/4" rigid non-metallic
HSEL200001	1/2" rigid non-metallic

ACCESS PULL ELBOW

Item#	Description
E990DR	1/2" non-metallic
E990ER	3/4" non-metallic

RIGID CONDUIT COUPLING

Item#	Description
880237	3/4" rigid non-metallic
88026	1/2" rigid non-metallic

TERMINALS

Item#	Description
1) EL1044	Male Insulated .250" x .032" 16/14 gauge Blue
2) EL1045	Flag Insulated .250" 16/14 gauge Blue

⚠WARNING:
This product can expose you to chemicals, including nickel, which is known to the State of California to cause cancer and birth defects or other reproductive harm. For more information, go to www.P65Warnings.ca.gov

TERMINALS

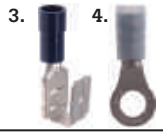

Item#	Description
3) EL1046	Piggy Back .250" x .032" 16/14 gauge Blue
4) EL1047	Insulated Ring #10 16/14 gauge Blue

⚠WARNING:
This product can expose you to chemicals, including nickel, which is known to the State of California to cause cancer and birth defects or other reproductive harm. For more information, go to www.P65Warnings.ca.gov

WIRE CONNECTORS

Item#	Description
WNB25	Blue, twist on size 22-14, Pkg of 25
WNR25	Red, twist on size 18-8, Pkg of 25
WNY25	Yellow, twist on size 18-10, Pkg of 25
WNO25	Orange, twist on size 22-14, Pkg of 25

14/3 CORD

• Sold per foot or bulk 250' rolls

Item#	Description
88031	Bulk Cord 14/3 Black
KT143COR	Bulk Cord 14/3 Yellow

CABLE

Item#	Description
88033	Rubber coated, 4 wire, 16 gauge

CONTROLLER & ALARM SENSOR WIRE

• 18/2 sold per foot

Item#	Description
HS2427	Yellow Sensor Wire
55065	Gray Sensor Wire

LIQUID TIGHT CORD CONNECTOR

#61646

Item#	Description
61646	1/2" conduit, SO cord size 1/4" to 1/2", black
LPCG507	1/2" conduit, SO cord size 3/8" to 3/4", avay
PWPCGPG12NTB	Cable Gland 1/2", black

JUNCTION BOX

Item#	Description
CARLNE989R	12" x 12" x 6" w/lid & gasket
CARLNE989UUN	12" x 12" x 4" w/lid & gasket
CARLNE989N	8" x 8" x 4" w/lid & gasket
E989NNJ	4" x 4" x 2" Non-metallic w/lid & gasket

BREAKER PANEL

Item#	Description
QO140M200RB	w/main breaker 200 Amp

⚠WARNING:
This product can expose you to chemicals, including nickel, which is known to the State of California to cause cancer and birth defects or other reproductive harm. For more information, go to www.P65Warnings.ca.gov

MAIN BREAKER LOAD CENTER

• Square D

Item#	Description
QO120M100RB	100 Amp, 20 space 240/110 V

⚠WARNING:
This product can expose you to chemicals, including nickel, which is known to the State of California to cause cancer and birth defects or other reproductive harm. For more information, go to www.P65Warnings.ca.gov

BREAKER CIRCUITS

• Square D

Item#	Description
QO215	2 Pole 15 Amp QO Type
QO220	2 Pole 20 Amp QO Type
QO115	1 Pole 15 Amp QO Type
QO120	1 Pole 20 Amp QO Type

CONDUIT FITTING LOCKNUTS

Item#	Description
88024	Steel, 3/4"
88025	Steel, 1/2"

HOLE CLAMP

Item#	Description
FC20	Non-metallic 1/2"
FC25	Non-metallic 3/4"

ELECTRICAL TAPE

Item#	Description
88048	3/4" x 60' 7 Mil

CABLE TIES

Sold in bags of 100

Item#	Description
HE461713	4" UV black
59057-100	7-1/2" UV black
HE461763	12" UV black
FP99050001	7-1/2" natural

END CAPS

Item#	Description
10194	3/4" cap non-metallic
CARLNE958D	1/2" cap non-metallic

CORD SETS

Item#	Description
HSCS-002	9', 240V, 14/3
88088	2', 120V, 14/3
HSCS-001	Flush control cord, 110V, 9', 14/3
FC	9', 240V, Standard Angle, 16/3
7FT-120VFEMALE	7', 240V, 16/3, Right Angle
7FTRA120MALE	7' 120V MALE Right Angle (16/3)
7FTRA240MALE	7' 240V MALE Right Angle (16/3)
143CS6-15P-12	12', 220V, 14/3
EL1037	21", 240V, w/ s-hook & terminals

MOLDEX RESPIRATORY PROTECTION

- Dura-Mesh® outer shell retains its shape in moist conditions.
- Soft foam nose cushion provides secure fit without metal straps.
- Double straps holds mask firmly.

Item#	Description
1) 790131	Dust Mask 2200N95, Low cost protection, 20/box, Med/Large
2) 790130	Dust & Mist Respirator 2300N95, Exhale valve quickly releases exhaled air, 10/box, Med/Large
3) 790195	Dust & Mist Respirator 2400N95, Charcoal filter reduces nuisance odors, 10/box, Med/Large

7000 & 9000 SERIES REUSABLE MASKS

Moldex designed the 7000 half mask and 9000 full face series to be the most user friendly reusable respirators on the market. Featuring fewer parts, minimal maintenance, and a wider field of vision. Ultra-lightweight, durable, and economical, providing maximum comfort with extended use.

Item#	OEM#	Description
797112	7112	Moldex 7000 Series Half Mask Medium for Pesticide/Organic Vapor use w/ N95 Prefilter Assembly
797002	7002	Moldex 7000 Series Half Mask Only
797942	7942	Moldex 7000 Series Half Mask Medium w/ P100 HEPA Filter Assy.
799002	9002	Moldex 9000 Series Full Mask Only
797920	7920	Piggyback Adapter for P100 Filter pair
797940	7940	Replacement P100 Filter pair
378910	8910	N95 Particulate Filter (5 pair)
377020	7020	N95 Filter Retainer pair
377600	7600	Replacement Multi-Gas Smart Cartridge

3M PARTICULATE RESPIRATORS

3M disposable particulate respirators are designed to provide comfortable, reliable protection against certain organic particles. These face pieces feature adjustable nose-clips and dual head bands for a better seal and a secure fit. Carbon layer on R95 models help reduce nuisance levels of gas and vapors. Cool Flow™ Exhalation Valve reduces heat build-up inside the respirator for greater comfort.

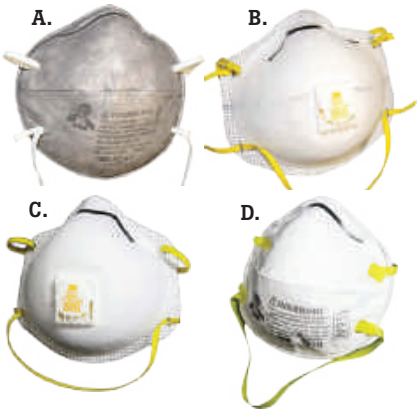

Item#	Description
A) 790203	R95 Respirator w/ Carbon Filter, 8247, 20/box
B) 790202	R95 Respirator w/ Carbon Filter and Cool Flow™ Valve, 8516, 10/box
C) 790200	N95 Respirator w/ Cool Flow™ Valve, 8511, 10/box
D) 790201	N95, Classic Respirator, 8210, 20/box

GERSON NUISANCE MASK

Non-rated nuisance mask which reduces irritating effects of non-toxic particles such as dust, pollen and cut grass. Paper construction with adjustable nose piece and single strap.

Item#	Description
7901008	Nuisance mask 50/box

MEDICAL STYLE DUST MASK

- 50 per box

Item#	Description
470700	Medical Style Dust Mask

HAIR NETS & BEARD COVERS

Item#	Description
4GL67	Hair Nets, 100 ct. bag
9735001	Beard Cover, White Polypropylene, 100/bag, 100/case
9735021	Beard Cover, White Polyestera, 100/bag, 100/case

FOAM EAR PLUGS

- Disposable foam ear plugs, Pura-Fit® NRR3
- 200 pairs per box
- Uncorded

Item#	Description
790100	Foam Ear Plugs

PRE-POWDERED LATEX GLOVES

- 100 per box

Item#	Description
002053	Lightly Powdered Medium
002107	Lightly Powdered Large
003852	Lightly Powdered XL
001902	Vinyl Powdered Large

COATED KNIT GLOVES

- 72 pair/case

Item#	Description
277821	Small Coated Knit Gray
277822	Medium Coated Knit Gray
277823	Large Coated Knit Gray
277824	X-Large Coated Knit Gray

SHORT SLEEVE POPLIN COVERALLS

- 5 oz Poplin fabric
- 65% Polyester / 35% Combed Cotton
- Two-way brass zipper
- Two set-in front pockets
- Two chest pockets
- Two patch hip pockets

Item#	Description
CP40NV-RG-S	Small
CP40NV-RG-M	Medium
CP40NV-RG-L	Large
CP40NV-RG-XL	Extra Large
CP40NV-RG-XXL	2X large
CP40NV-RG-3XL	3X large
CP40NV-RG-4XL	4X large

DISPOSABLE COVERALLS

- Available sizes M-5XL
- 100% polypropylene
- Navy
- Case of 25

Item#	Description
362152-25	Medium
362153-25	Large
362154-25	X-Large
362155-25	2X-Large
362156-25	3X-Large
362157-25	4X-Large
362158-25	5X-Large

DISPOSABLE COVERALLS

- Available sizes L-XXL
- 100% polypropylene
- White
- Zipper front

Item#	Description
79098L	Large
79098L-25	Large, Case of 25
79098XL	X-Large
79098M-25	X-Large, Case of 25
79102	XX-Large

APE BOOT™ YELLOW

100% high density natural latex rubber shoe cover. One piece construction with anti-slip tractor pattern sole. Top thickness (top 1/3 of boot) is 0.018 Mil. Bottom thickness (bottom 2/3 of boot) is 0.24 Mil. M fits sizes 7-9; L fits sizes 9-11; XL fits sizes 11-15; XXL fits sizes 15+.

Item #	Size	Quantity
419485	Medium	1 Pair/Pack
419492	Medium	10 Pair/Bag
419502	Medium	120 Pair/Case
419483	Large	1 Pair/Pack
419493	Large	10 Pair/Bag
419503	Large	120 Pair/Case
419484	X-Large	1 Pair/Pack
419494	X-Large	10 Pair/Bag
419504	X-Large	120 Pair/Case
419485	2X-Large	1 Pair/Pack
419495	2X-Large	10 Pair/Bag
419505	2X-Large	120 Pair/Case

Chorelite

These boots are lightweight deck footwear. Lighter than PVC made boots these are made with closed cell DuPont EVA foam. Being made with EVA material these boots are insulated and are able to provide more warmth than other rubber boots. These boots are able to allow for a longer less tiring day on your feet. With orthotic foot pad support, ankle bars, and 4 instep-guard bars, these boots are able to provide the most support and comfort you could ever want in a deck boot. These boots are perfect for the deck with non-marking and non-skid soles. These Marlin Deck Boots are a must have for any long time angler or boater. They are by far the most comfortable deck boots out there

Item#	Description
M688-8W	Size 8 White
M688-9W	Size 9 White
M688-10W	Size 10 White
M688-11W	Size 11 White
M688-12W	Size 12 White
M688-13W	Size 13 White
M688-8	Size 8
M688-9	Size 9
M688-10	Size 10
M688-11	Size 11
M688-12	Size 12
M688-13	Size 13

16" MONARCH PLAIN TOE BOOTS

Injected molded seamless construction with cleated outsole. Kick off lugs for easy on/off.

Item#	Description
87512-5	Size 5
87512-6	Size 6
87512-7	Size 7
87512-8	Size 8
87512-9	Size 9
87512-10	Size 10
87512-11	Size 11
87512-12	Size 12
87512-13	Size 13

SERVUS STEEL TOE SAFETY BOOT

15" high PVC outer with reinforced steel toe. Good general purpose farm boot where extra protection is desired.

Item#	Description
75109-6	Size 6
75109-7	Size 7
75109-8	Size 8
75109-9	Size 9
75109-10	Size 10
75109-11	Size 11
75109-12	Size 12
75109-13	Size 13

DISPOSABLE BOOT COVERS

#TI52658

Disposable Boot/Shoe Covers with laminated Fabric, has a PVC textured sole. They are waterproof (not submersible) with 2 elastic bands, on calf and ankle height. White in color. Length: 16-1/2" Height: 18". 50 per box.

HEAVY DUTY DISPOSABLE BOOT COVERS

#TI53474

Disposable Boot/Shoe Covers with Heavy-duty laminated fabric made to be extremely skid resistance. They are Waterproof with an Elastic opening and a seamless bottom. Grey in color. Length: 19" Height: 7-3/4". 100 per box.

LIGHT WEIGHT DISPOSABLE BOOT COVERS

#TI72388

Disposable Boot/Shoe covers with light weight laminated fabric. They are waterproof with an elastic opening and a seamless bottom. Color: white. 6 mil. Length: 15-1/2" Height: 6-1/2". 150 per box.

BOOT POLY PRO

• 50 pairs per box

Item#	Description
318515	Boot Poly Pro 6 Mil. Size XL

BOOT COVERS

• Polypropylene

Item#	Description
SC-NWI	100/box

PLASTIC COVERS

• 25 pairs per box

Item#	Description
79099	Plastic Covers, one size fits all
429503	3 mil, elastic top
429510	6 mil, elastic top

TINGLEY BOOT SAVER® SHOE COVERS

Liquid-proof, disposable and economical Tingley Boot Saver® shoe covers are ideal for preventing pathogen transmission and cross-contamination.

Item #	Qty.	Size	Fits Sizes
6333-M	100 pairs	Medium	7-9
6333-L	100 pairs	Large	9-11
6333-XL	100 pairs	X-Large	12-14
6333-2XL	100 pairs	2-XL	15+

TINGLEY FLITE™ SAFETY TOE BOOT WITH CHEVRON-PLUS™ OUTSOLE

Made from Aerex 1.5.5™ – a proprietary, chemical-resistant, thermally-insulative, microcellular polymer, resulting in boots that are over 40% lighter compared to most steel toe PVC and rubber knee boots. Lightweight upper, cushioned heel, slip-resistant nitrile rubber outsole and composite toe provide superior comfort and safety.

Item#	Fits Sizes	Fits Sizes
26256-5	Men's 5	Women's 7
26256-4	Men's 4	Women's 6
26256-6	Men's 6	Women's 8
26256-7	Men's 7	Women's 8
26256-8	Men's 8	Women's 10
26256-9	Men's 9	Women's 11

Item#	Fits Sizes	Fits Sizes
26256-10	Men's 10	Women's 12
26256-11	Men's 11	Women's 13
26256-12	Men's 12	
26256-13	Men's 13	
26256-14	Men's 14	
26256-15	Men's 15	

TINGLEY AIRGO™ LIGHTWEIGHT KNEE BOOTS

Lightweight, yet durable, these boots are 100% waterproof and have cleated outsoles for traction and slip resistance in wet and muddy conditions.

Item#	Description
21154-6	Size 6
21154-7	Size 7
21154-8	Size 8
21154-9	Size 9
21154-10	Size 10
21154-11	Size 11
21154-12	Size 12
21154-13	Size 13

TINGLEY WORKBRUTE® 10" WORK BOOT

PVC Overshoes have thicker and deeper cleats for better grip and longer wear.

Item #	Size	Fits Sizes	Fits Sizes
35121-XS	X-Small	Men's 5-6.5	Women's 7-8.5
35121-S	Small	Men's 6.5-8	Women's 8.5-10
35121-M	Medium	Men's 8-9.5	Women's 10-11.5
35121-L	Large	Men's 9.5-11	Women's 11.5-13
35121-XL	X-Large	Men's 11-13	
35121-XXL	2X-Large	Men's 13-15	

TINGLEY PROFILE™ PLAIN TOE KNEE BOOT

The Tingley® Profile™ knee boot is formulated with high quality PVC resins and Frigiflex® low temperature additives. The result is a boot that has good abrasion resistance and excellent flexibility in cold temperatures.

Item #	Size	Fits Sizes	Fits Sizes
51154-S	Small	Men's 5-7	Women's 7-9
51154-M	Medium	Men's 7-9	Women's 9-11
51154-L	Large	Men's 9-11	Women's 11-13
51154-XL	X-Large	Men's 11-13	

TINGLEY PROFILE™ SAFETY TOE KNEE BOOT

The Tingley® Profile™ knee boot is formulated with high quality PVC resins and Frigiflex® low temperature additives. The result is a boot that has good abrasion resistance and excellent flexibility in cold temperatures.

Item #	Size	Fits Sizes	Fits Sizes
51254-S	Small	Men's 5-7	Women's 7-9
51254-M	Medium	Men's 7-9	Women's 9-11
51254-L	Large	Men's 9-11	Women's 11-13
51254-XL	X-Large	Men's 11-13	

TINGLEY YELLOW 3 PIECE RAIN SUIT

Tingley® Yellow 3 Piece Rain Suit, .35MM PVC/Polyester, 14Mil.
Versatile suit, designed for general purpose applications.

Item#	Size
S53307-M	Medium
S53307-L	Large
S53307-XL	X-Large
S53307-2XL	2X-Large
S53307-3XL	3X-Large
S53307-4XL	4X-Large
S53307-5XL	5X-Large

TINGLEY COMFORT-TUFF® ORANGE 2 PIECE RAIN SUIT

The Comfort-Tuff rainsuit is generously cut for ease of movement and comfort. With such features as electronically welded seams, attached hood, easy access cargo pockets, vented cape back, snaps for adjustable fit, and heavy duty zipper, they are great for work or play.

Item#	Size
S63219-S	Small
S63219-M	Medium
S63219-L	Large
S63219-XL	X-Large
S63219-XXL	XX-Large
S63217-XXXL	XXX-Large

TINGLEY COMFORT-TUFF® YELLOW 2 PIECE RAIN SUIT

The Comfort-Tuff rainsuit is generously cut for ease of movement and comfort. With such features as electronically welded seams, attached hood, easy access cargo pockets, vented cape back, snaps for adjustable fit, and heavy duty zipper, they are great for work or play.

Item#	Size
S63217-M	Medium
S63217-S	Small
S63217-L	Large
S63217-XL	X-Large
S63217-XXL	XX-Large
S63217-XXXL	XXX-Large

No Pre-Mix Hose End Sprayer

- No pre-mixing - set metering dial for required dilution; concentrate & water will automatically be mixed at set rate.
- Metering dial automatically be mixed at set rate. Metering dial selects from 16 mixing ratios; 1 teaspoon up to 10 tablespoons.
- Sprays up to 100 gallons, remove the deflector for solid stream coverage up to 30'.
- Operates on water pressures ranging from 45-60psi.
- Built-in anti-siphon device prevents back flow, unused chemicals can be returned to the container.

#HH13621115 ..... No Pre-Mix Hose End Sprayer

HydroSprayer

Preset applicator with 1/2 oz. per gallon tip. Ideal for apply high volume saturation of Tek-Trol at low pressures. Saves on wastage and improves chemical performance.

#TEK-002 .....Tek-Trol applicator, quart, liquid

1-Gallon Pump Sprayer

- Features durable, lightweight polyethylene tank which is non-corrosive to most fertilizers, herbicides and pesticides.
- Translucent poly tank allows easy viewing of liquid levels.
- Patent SureSpray® filter prevents most debris from clogging hose.
- Funnel top for easy filling.
- Pressure relief valve to remove compressed air before opening to fill.

#CH20075..... 1 gal. pump sprayer

HydroFoamer

Delivers disinfectant as thick, clinging foam to improve its effective power. Foam clings to vertical surfaces and promotes better coverage because operators can see where the disinfectant has been applied. Applicator connects to a regular garden hose, and its large, 48-oz. bottle is filled directly with disinfectant concentrate. Dilution rate is Max 128:1 Min 12:1.

#HS483 .....HydroFoamer

20 Qt. Flat-Back Bucket

Flat-Back design fits snug against wall or gates and it makes hauling easier. Heavy polyethylene plastic resists damage from impact and warping. Heavy-duty wire handle with hanging notch. 14.75" diameter x 23" high, holds 5 gals. Black.

#P20FB-BLK.....20 Qt. Flat-Back Bucket

High-Pressure Foamer

Foamer attachement for use with high pressure sprayers; includes wide mouth, 64-oz tank. Constructed of corrosion-resistance stainless steel and plastic with five chemical mixture settings. Rated for 3625 psi and 5.2 gpm with max temperature rating of 176°F. Unique design reduces chemical consumption by up to 50% compared to other foamers.

#NPST732.....High-Pressure Foamer

Black Disinfectant Mat

Thousands of rubber fingers cover the mat surface to dislodge debris from boot soles. Recessed mat holds up to one gallon solution.

#TM222.....24" x 36"

Disinfection Mat

#802000 .....24" x 32" Disinfection Mat

Rubber Disinfectant Pan & Tub

#HP3 ..... 3-gal. pan, 17-1/2" dia x 4-1/2" high
#HP650 ..... 6.5-gal. tub, 18" dia. x 8" high

TRAFFIC C.O.P. FOOT PAN POWDER

A dry foot bath disinfectant formulated from a blend of chlorine, silicates, deodorizers, and acid impregnated zeolites. Traffic C.O.P. does not freeze or evaporate like liquid disinfectants. Abrasives in the formula help remove organic matter on footwear. Directions for use: Add 1/2" level of material to foot pans and remove organic material as it accumulates. Completely change powder in the pan every three weeks.

#57310..... 18 lb. Bucket

Disinfection Mat

Our highest quality entrance mat. Constructed of foam core covered by a tough poly mesh with non-permeable bottom and sides to contain the disinfectant solution. The mat's extra capacity, of approximately 2 gallons, keeps solution fresher. The extra width prevents "walk-arounds" at entrance doors. We found the mats to hold solution better on uneven surfaces than other types we've used.

#4593424..... 34" x 24" x 1" deep

Kick Away™ Boot Scraper

Heavy duty, commercial grade boot scraper with durable powder coated steel frame and base. Features built in scraper on each sides. Poly brush mounts with extra stiff nylon bristles. Mounting screws and anchors included. No assembly required. Dimensions: 7.5"H x 9.5"W.

#KAHD1.....Commercial Model w/ base
#KAHDRB1 .....Replacement Brush Set

EZ Disinfectant Pan

Covered foot pan reduces contamination of disinfectants. Includes 36" handle for ease of opening and closing. Metal pan measures 16" x 14" x 2" deep.

#IS9601-001 .....EZ Disinfectant Pan

Gorilla Tape

Gorilla Tape offers over-the-top results with its heavy-duty, double-thick duct tape. Made to stick to rough, uneven, unforgiving surfaces like wood, stone, stucco, plaster, brick and more.

#6025002 ..... White, 1.88" x 30 yd. roll
#106425 ..... Black Wide, 3" x 25 yd. roll
#6027003 ..... Clear, 1.88" x 27' roll
#105629 ..... Black 30 yd. roll
#6010902 ..... Camo, 1.88" x 9 yd. roll
#6004002 ..... Blaze orange, 1.88"x 35 yd. roll
#6025302 ..... White wide, 3" x 25 yd. roll

Gorilla Tape Patch and Seal

Gorilla Waterproof Patch & Seal Tape instantly seals out water, air, and moisture. With an extra thick adhesive layer and UV resistant backing this tape conforms to form a permanent bond indoors and out. At 4" wide use it to patch holes, cracks, gaps and tears, even underwater. Excellent for Home, Auto, Marine, Camping, RVs, Outdoors, and more!

#4612502 ..... Waterproof 4" X 10' Roll

Gorilla Glue

The product that started it all, Gorilla Glue, is known for its industrial holding power and versatility, regardless of the substrate. Easily bonds wood, stone, metal, ceramic, foam, glass and more!

#50002 ..... Gorilla Glue 2 oz. Tube
#50004 ..... Gorilla Glue 4 oz. Tube
#50008 ..... Gorilla Glue 8 oz. Tube

Flex Tape

Powerful adhesive with a thick, flexible rubberized backing that conforms to virtually any shape and surface, even underwater. Gets stronger with time and pressure. UV resistant, VOC- free, withstands extreme temperature and weather conditions.

#3330347 ..... 4" wide x 5', black
#7189640 ..... 8" wide x 5', white
#9319377 ..... 4" wide x 5, white

Rescue Tape

The ORIGINAL Self-Fusing Silicone Tape

It's 6 o'clock on a Saturday and you're already late. You walk through the houses and oh, no! A leak in a water line. What do you do? **Reach for Rescue Tape!**

Feed Line

- 950 psi Tensile Strength
- Waterproof & Airtight
- 1" x 12' Roll

#RT1001 ..... Black
#RT1002 ..... Red
#RT1004 ..... Clear
#RT1005 ..... Yellow
#RT1006 ..... Blue
#RT1007 ..... Green
#RT1008 ..... Orange

Jake's Wire Tighteners™

In less than one minute you can tighten your fence wire with this simple wire tightening clip. Jake's Wire Tighteners™ work together with a turning tool to give leverage when applied to your fence.

#JWT001 ..... 1/4" Standard, 20ct
#JWT002 ..... 5/16" Heavy Duty, 15ct
#JWT003 ..... Handle Wire Tightener

⚠ WARNING:
This product can expose you to chemicals, including nickel, which is known to the State of California to cause cancer and birth defects or other reproductive harm. For more information, go to www.P65Warnings.ca.gov

Shocker Line Charger

Low impedance model delivers an effective jolt even in the presence of litter and debris. 120 volts with .10 joule output. 2-year warranty.

#DE-60 ..... Line charger

Shocker Line Charger

Delivers an non-pulsing continous voltage charge. 120 Volts.

#PG-50 ..... Continuous line charger

Stop Roost Spinner

The Stop Roost Spinner is designed for retrofit applications allowing the electricity to be disconnected from the shocker wires. This eliminates the problem of stray voltage at the nipples.

#ISSRS-22 ..... 22" rod for shocker wire

#LX-1112

#LX-1100

#LX-1902

#LX-1152

Lumex Grease Products

#LX-1100 ..... Gun Grease Utility Grade
#LX-1112 ..... Gun Grease Standard Grade
#LX-1152 ..... Gun Grease Pistol Grip Deluxe With 18" Flex Hose
#LX-1203 ..... Hose Grease Gun 18" 1/8" NPT 4500PSI
#LX-1401 ..... Coupler Grease Gun w/ Hex 1/8" NPT
#LX-1902 ..... Grease Multi-Purpose Lithium 14oz. Cartridge

⚠ WARNING: This product can expose you to chemicals, including nickel, which is known to the State of California to cause cancer and birth defects or other reproductive harm. For more information, go to www.P65Warnings.ca.gov

AeroKroil

#AEROKROIL ..... 16 oz. Spray Can

Chain & Gear Oil

#4F979 ..... Gear oil, 32 oz., SAE 80W-90
#4ZF30 ..... Synthetic oil, 32 oz., SAE 140
#HS450 .... SAE 80W-90, 15 oz., for auger gear heads

WD-40® Smart Straw

#60008 ..... WD-40 11 oz. Smart Straw

Fluid Film

#60007 ..... Fluid Film, 11-3/4 oz. aerosol can

PB Blaster

#4LRF8 ..... PB Blaster 11 oz. Aerosol Can
#4LRF9 ..... PB Blaster 1 gal. Liquid Can

Liquid Wrench

#HE556650 ..... Liquid Wrench, 11 oz. aerosol can
#6349988 ..... Silicone spray, 11 oz. aerosol
#8461675 ... White lithium grease, 10.25 oz aerosol
#G3897763 ..... White lithium grease, 8 oz. tube

O-Ring Silicone Lubricant

#1RGZ6 .... 2 oz. squeeze bottle for medicator repair

Permatex

#HH20220547 ..... 8 oz. Anti-Seize Lubricant

Loctite

#4KM46 ..... 8 oz. Anti-Seize Silver Lubricant

Rubber Tarp Straps

Erickson natural rubber tarp straps. Subtract 3" from total length to calculate rubber end-to-end measurement.

SAVE WHEN YOU BUY 10 OR MORE.

#06711 ..... 13"
#06712 ..... 18"
#06713 ..... 24"
#06714 ..... 34"
#06715 ..... 44"

#DRY0035 #DRY0030 #DRY0020 #DRY0015 #DRY0005

Interstate Batteries

Item#	Type	Description
DRY0035	AAA	Alkaline, 4-pack card
DRY0030	AA	Alkaline, 4-pack card
DRY0020	D	1.5 V, Alkaline, 2-Pack
DRY0015	C	1.5 V, 2-Pack
DRY0005	9V	Carded (1 battery)

⚠ WARNING:
This product can expose you to chemicals, including lead, which is known to the State of California to cause cancer and birth defects or other reproductive harm. For more information, go to www.P65Warnings.ca.gov

Interstate Workaholic Batteries

Item#	Type	Description
DRY-0075	AAA	Alkaline, 24-pack box
DRY0074	AA	Alkaline, 600-pack tray (30 pkgs)
DRY-0070	AA	Alkaline, 24-pack
DRY-0080	C	Alkaline, 12-pack
DRY-0085	D	Alkaline, 12-pack
DRY0110	AAA	Alkaline, 600-pack tray
DRY0196	9V	Alkaline,12-pack box

⚠ WARNING:
This product can expose you to chemicals, including lead, which is known to the State of California to cause cancer and birth defects or other reproductive harm. For more information, go to www.P65Warnings.ca.gov

Agita 10 WG

Water-soluble spot spray for the control of Darkling beetles and house flies. Apply with standard liquid spray applicator around the outside perimeter of animal housing. Average residual of 6 weeks.

#062584 ..... 2.2 lbs

Zetagard Insecticide

Contains: Zetacypermethrin and is synergized with Piperonyl Butoxide
When to use it: ZetaGard LBT is an advanced dust treatment for control of darkling beetles (lesser mealworm) in poultry litter in chicken broiler and turkey growout houses. This potent formulation provides excellent control of hard to kill darkling beetles including those resistant to other pesticides including certain pyrethroids.
How to use it: Recommended application rate of 50 lbs. per 20,000 sq. ft. Sold in 12.5 lb. bags. 4 bags per pail.

#YTX33.....Zetagard Dust (Y-TEX)

Bifen I/T Insecticide

Used to prevent and control termites, fire ants, and many other insects that cause structural damage. This 1 gallon container has 7.9 % bifenthrin as its active ingredient. Use as directed.

#52499..... Bifen I/T Bifenthrin 7.9% 1 gal. Jug

Taurus SC

TAURUS® SC is a water-based suspension concentrate of 9.1% Fipronil that controls a wide variety of insect pests. Taurus SC is a non-repellent insecticide/ termiticide that is undetectable to target pests, allowing them to touch, ingest and spread the insecticide throughout the entire colony.

#099740..... 78 oz bottle
#376019 ..... 20 oz bottle

Bengal Foaming Wasp & Hornet Spray

A water based, synthetic pyrethroid foaming spray that kills on contact.

- Non-staining on most surfaces
- Kills returning insects
- Foam trapping spray
- Up to 25' jet spray

#MH15240..... 18 oz can

Country Vet Flying Insect and Air Freshening Kit

A dual purpose kit for the farm and home. Fully automatic insect control for flies, mosquitoes and moths. Fully automatic air freshener for fragrance and odor control. 30 days of 24-hour fragrance and flying insect control. Designed with solid state circuitry and a 15-minute setting for optimum performance. 6 per case.

#01-006 ..... 30-day metered air freshener kit
#01-008 ..... Dispenser only

Country Vet Refills

Refill cans for Country Vet automatic dispensers.

#01-001..... Clean 'N Fresh air freshener
#01-005 ..... Fly spray
#01-33-4701CVCA..... Dutch Apple Spice

Enforcer Wasp & Yellow Jacket Foam

- Fast-acting, blanketing foam traps and kills on contact.
- Water-based formula is non-staining.
- Jet blast up to 22 feet.
- For outdoor use only. 16 oz can.

#FHW16 .....Enforcer Wasp & Yellow Jacket Foam

No Natz Spray

- Repels Gnats & Biting Flies
- Botanical
- Pleasant Fragrance
- Contains NO DEET

#NN2OZ..... 2 oz. size
#NN4OZ..... 4 oz. size

Prozap® LD-44Z Insect Fogger

- LD-44Z Insect Fogger quickly knocks-down and kills flying and crawling insects.
- Contains 0.5% Pyrethrin and 4% PBO.
- Controls flies, mosquitoes, wasps, gnats, lady Asian beetles, roaches, spiders, plus 19 other flying and crawling insects.
- For use in barns, milk rooms, parlors, stables, kennels and other buildings.

#1453510..... 20 oz can

Prozap® LD-44T Fly Spray

Refills for the ProMist'r Metered Dispenser.

- Contains 1% Pyrethrins, 2% PBO and 3% 264.
- 6.5 oz can lasts up to 30 days in the Pro-Mist'r Metered Dispenser.
- Covers 6,000 cubic feet of space.

#0073010..... 6.5 oz can

Prozap® ProMist'r II Dispenser

- For use with Prozap® LD-44TTM Metered Insecticide
- Features power switch display, 24 hour or day only operation and three spray interval selection; 7.5, 15 or 30 minute intervals
- When set at 30 minute intervals will provide up to 30 days of coverage per refill.
- Uses (2) "D" size batteries. Not Included.

#CT89500..... ProMist'r Dispenser only
#CT89500KIT.....Kit includes Dispenser and LD-44T Fly Spray

Annihilator™ Polyzone®

Broad-spectrum premise spray provides residual insect control for up to 90 days. Uses technology that binds active ingredient to surface and slowly releases over time to achieve extended control.

- Active ingredient – 4.74% deltamenthrin
- .06% treatment rate is 10,666 sq. ft.
- 1 pt. bottle

#BAY82020.....Annihilator™ Polyzone®

CyLence Pour-On

The Bayer Cylence Pour-On Insecticide is for direct animal use on beef cattle, and lactating and non lactating dairy cattle. Active ingredient 1% cyfluthrin, a pyrethroid, controls horn flies, face flies, biting lice and sucking lice.

#BAY713590.....1 Pint

Tempo® 1% Dust Insecticide

- Provides effective pest control and easy application
- Requires no mixing equipment; non-corrosive, little to no odor
- Available in 40 lb. bucket containing four 10 lb. sleeves
- 0.5 to 1 lb. treats 1,000 sq. ft. facility

#TEMPODUST.....Tempo 1% Dust Insecticide

Tempo® SC Ultra Premise Spray

- Fifth-generation pyrethroid containing 11.8% beta-cyfluthrin
- Strong insecticidal activity in a stable, suspension-concentrated liquid
- Available in 240 ml container
- 8 to 16 ml per 1 gal. of water treats 1,000 sq. ft. facility

#TEMPOBOTTLE..... Tempo SC Ultra Premise Spray

QuickBayt® Fly Bait

- Scatter bait formula in 5 lb. pail
- Remains effective for up to four weeks
- 6 oz. treats 1,000 sq. ft.

#BAY066399.....5 lb. pail
#BAY8731627.....35 lb. bulk pail

QuickBayt® Spot Spray

The proven fly-killing power of QuickBayt Spot Spray is now available in convenient 24 fl. oz. spray bottle. Just add water and you're ready to attract and kill flies on any surface. Spot Spray is convenient and easy to apply, is powerful and long-lasting and can be used indoors or out.

#BAY81147923.....3 oz. in a 24 oz. bottle

QuickBayt® Spot Spray

- Simply mix with water and spray where needed
- Treats places conventional granular baits can't reach
- Provides up to six weeks of protection indoors
- An effective spot size is 4 sq. ft.
- 1 lb. container treats 1,000 sq. ft. of fly-resting areas

#BAY08968805.....QuickBayt® Spot Spray

Credo®

Specifically formulated for the poultry industry to control Darkling beetles in the larvae and adult stages. Use in rotation with Tempo to prevent build-up of chemical resistance by insects. Credo® SC is the original formulation containing 42.8% Imidacloprid.

#BAY80511249.....30 oz. bottle

Tempo® SC Ultra

For smaller applications and single dose needs.

#BAY80694254.....32 ml bottle

ProZap Insectrin X Concentrate

- Contains 10% Permethrin
- Mix with water or mineral oil
- For use as a dilution spray, spot treatment, or in a back rubbing devices.

#1037510.....32 Oz.

Beetle Shield™ 6

Beetle Shield™ 6 is a ready-to-use poultry insecticide dust. Controls darkling beetles, northern fowl mites, chicken mites and lice. Can be used for banded applications. No withholding period from last application to slaughter. Coverage is 100 sq. ft./ 1.4 to 4 oz. Active ingredient is tetrachlorvinphos 6.0%.

#56208.....4) 10 lb. sleeves

Permethrin SFR

36.8% active ingredient for fast knockdown and long-lasting 90 day residual treatment in and around animal housing.

#41008..... 1.25 gal container

LEVEL UP YOUR FLY CONTROL

Understand the three levels of fly activity for more effective control

Flies on hog or poultry farms are more than a nuisance; they carry diseases that can pose a severe health hazard to people and animals. Fly control is a basic component of biosecurity in hog and poultry houses.

Given the housefly's seven-day life cycle and the almost perfect environment conditions livestock and poultry facilities provid wonder populations can increase rapidly. Effective fly control

Scan to read the full article

IN, ON & AROUND

Pyronyl™ Crop Spray

A broad-spectrum insecticide for use in dairy, livestock and poultry operations, Pyronyl™ Crop Spray is an insecticide formulated for surface spraying, misting systems and on-animal uses.

#100208914 ..... Spray Crop Quart
#100208915 ..... Spray Crop Gallon

LOW-LEVEL

Golden Malrin® Fly Bait

The standard in fly baits for over 30 years, Golden Malrin® bait attracts and controls nuisance flies right down to the last grain of bait. The Golden Malrin® Fly Bait two-phase action knocks out nuisance flies quickly and effectively. First, Muscamone® fly attractant draws flies in. Then, as they feed on the sugar-based bait, the active ingredient methomyl delivers the final blow, killing flies after ingestion. Golden Malrin® bait can be applied directly from the container or placed into a bait station such as the Starbar® Fly Bait Station. Cannot ship to New York or Indiana.

#SB8040 ..... 40 lb
#100527078 ..... 10 lb can

QuikStrike® Fly Abatement Strips

The QuikStrike® Fly Abatement Strip is specially designed to control nuisance flies. Flies are instinctively drawn to its curved design created to facilitate fly feeding. QuikStrike® Fly Abatement Strip has a large exposed surface area for flies to feed on and a unique active ingredient that kills flies in seconds. A triple-action attractant draws flies to the strip where they feed on a sugar-based active ingredient coating. The QuikStrike® Fly Abatement Strips are ideal for use wherever nuisance flies are a problem.

#25100D ..... Quik Strike Fly Abatement Starbar

Starbar® Cyanarox™ Insecticidal Bait

For controlling house flies, it is both highly attractive and highly effective, resulting in quick knockdown.

#100535456 ..... 4 lb bucket

QuikStrike® Fly Bait

Granular bait that controls house flies quickly and stands up to pyrethrin resistance using the active ingredient dinotefuran.

#100508298 ..... 5 lb can

MEDIUM-LEVEL

Starbar® Fly Bait Station

Scatter baits are an effective and economical fly control method for areas with high fly populations. Flies are drawn in by the powerful attractants and die rapidly after feeding on the bait. The Starbar® Fly Bait Station makes the use of scatter baits easy by reducing the associated mess and exposure concerns due to spreading the bait over the open ground where children, pets and livestock may come in contact. Simply use one ounce of product per bait station.

#3006166.....Fly Bait Station for Scatter Baits Starbar

Bite Free™ Stable Fly Trap

Scientifically proven to help effectively trap stable flies, Bite Free™ Stable Fly Traps contain no insecticides and are economical and easy to use. Bite Free™ Stable Fly Traps hold more flies than other sticky traps with no fly trap odor. Its compact size offers a 360° trapping surface that holds several thousand flies. When the trap is full just throw it away. Bite Free™ Stable Fly Traps have a special weatherproof adhesive that won't melt or wash away.

#3005363..... Bite Free Stable Fly Trap Starbar

FlyRelief™ Trap

Recommended for perimeter use, FlyRelief™ trap catches thousands of flies. Insecticidefree, FlyRelief™ trap disposable fly traps come with built-in attractant and are excellent for use around pets, in the yard, kennel and garbage containers. Giant FlyRelief™ trap catches twice as many flies as the FlyRelief™ trap.

#100503132.....Standard Fly Relief Fly Trap Starbar
#100504346.....Giant Fly Relief Fly Trap Starbar

Fly Trap Attractant Refill

An exclusive formula that contains four different attractants flies can't resist in a water soluble pouch format. It can be used with Fly Terminator® Pro, Captivator® Fly Trap and other reusable water-based traps. Each package contains eight 30 gm. water soluble pouches.

#57102..... Fly Trap Attractant Refill

Milk Jugg™ Trap

Turn ordinary plastic jugs into effective, insecticide-free fly traps and catch over 35,000 flies economically with an exclusive attractant flies can't resist. It's easy to use, just add water and the attractant to a one-gallon milk jug and pop on the specially designed reusable top.

#3002613.....Milk Jugg Fly Trap Starbar

Trap 'n Toss™ Fly Trap

This handy, disposable fly trap can be hung up or set down wherever flies are a problem. Trap 'n Toss™ Fly Trap includes a special attractant that contains multiple feeding stimulants plus a fly sex attractant. Just squeeze it in and add water. Trap 'n Toss™ Fly Trap holds thousands of flies and can be simply thrown away when full.

#14624.....Trap'n Toss Fly Trap Starbar

Captivator® Fly Trap

Captivator® Fly Trap, the heavy-duty, reusable and economical plastic jar comes complete with 1 tube of attractant. Just squeeze attractant into a jar and add water. Captivator® Fly Trap's one-way entry system keeps flies in the trap and its 2-quart capacity means minimal maintenance.

#14680.....Captivator Fly Trap Starbar

HIGH-LEVEL

Lure Fly™ Trap

Lure-Fly™ trap is a super sticky fly paper that effectively attracts flies. It's a disposable fly ribbon that contains no insecticides. Easy to hang and even easier to use, Lure-Fly™ trap is economical fly control

#45200.....Lure Fly/Revenge Ribbons Starbar

Starbar® EZ Trap

EZ Trap® Fly Trap has a unique, compact design which offers a large trapping surface that can be used indoors and outdoors with no harmful chemicals. EZ Trap® Fly Trap is insecticide free and odor free.

#3004323.....EZ Trap 2-Pack

Fly Stik™ Jr. Trap

Sticky fly trap sticks that can be used indoors or outdoors. Fly Stik™ Jr. fly trap at 12 inches contains no insecticides and is odor-free. Great for use in and around barns, stables, corrals and homes.

#100503350..... 12" Single Stick Fly Trap Starbar

Pest Control

Rozol

Rozol Blue Tracking Powder is formulated with chlorophacinone, a multi-feed anticoagulant invented by Liphatech. Apply into rat burrows along the periphery of buildings, in patches along rodent runways, and in spaces between floors and walls.

#LT87510 ..... 10 lb. pail

FastDraw™ Soft Bait

FastDraw™ Soft Bait is a revolutionary concept in rodenticide technology from Liphatech®. It contains the active ingredient Difethialone, food-grade grains and oils, and has a unique no-wax formula. FastDraw™ pouches combine the bait integrity of mini-blocks with the money-saving, targeted dosing, of place packs. It is effective even in areas of infestation where competing food sources exist. Why wait for rodents to accept OTHER baits? Draw a following of rodents with FastDraw™. .35 oz. pouch.

#LT82908 ..... 8 lb. pail, 367 pouches
#LT82916 ..... 16 lb. pail, 734 pouches

Hombre™

Hombre™ contains difethialone, a singlefeed anticoagulant that is the newest active ingredient in the animal health industry. It is so advanced its lethal dose is lower than any other product on the market. With less active ingredient, more food quality grain and an attractive odor, Hombre™ is significantly more palpable than other baits.

Mini-Blocks - .75 oz

#LT82804 ..... 10 lb. pail, 225 mini-blocks
#LT82801 ..... 20 lb. pail, 450 mini-blocks

Pellet Place Packs - .9 oz

#LT82831 ..... 11 lb. pail, 200 packs

GUNSLINGER™

Gunslinger™ is Liphatech's® newest rodenticide and is made with the active ingredient Bromethalin. Gunslinger™ is an effective addition to a rodent control baiting program since it has a different mode of action. Plus, rodents stop feeding after eating the lethal dose, saving bait. More rats and mice can be controlled with less bait. Bromethalin disrupts oxidative phosphorylation in the central nervous system resulting in paralysis and death.

#LT83921 ..... 4 lb. pail, 130 mini-blocks

DoubleTap ™ Soft Bait

DoubleTap™ Soft Bait is the first and only chlorophacinone soft bait rodenticide in the Animal Health market. Add DoubleTap soft bait into your rotation, especially on farms where other active ingredients and bait formulations have been used for long time periods. It is a palatable, multiple-feed soft bait that effectively kills rats and mice. DoubleTap is for consistent everyday use – during light to heavy rodent activity

#LT87500 ..... 4 lb. bag

Renegade

Renegade 20 gram mini blocks are an ideal maintenance rodenticide where crumbs and scatter are a concern. Formulated with difethialone (25 ppm), a second-generation anticoagulant. Renegade is formulated with mold inhibitors making the ideal bait for high moisture environments such as cool cells. Blue marker dye can be seen in droppings.

#LT87406 ..... 20 lb. pail, 454 blocks

Revolver™ Soft Bait

Revolver™ soft bait provides the most palatable formulation of the most widely-used active ingredient, Bromadiolone. It is the single-feed solution when rotating to a Bromadiolone rodenticide in your biosecurity rodent control program. Revolver™ contains no-wax promoting quick feeding & results, in a low-cost per placement .42 oz. pouch.

#LT87400 ..... 8 lb. pail, 302 pouches
#LT87405 ..... 16 lb. pail, 604 pouches

BootHill™

BootHill™ contains Bromadiolone, a singlefeed anticoagulant that has a long history of proven efficiency. Superior palatability helps assure greater acceptance while preventing bait shyness. Available in a variety of effective formulation - mini-blocks, paraffinized pellets, and pellet place packs. BootHill™ is a perfect partner with Hombre™ in your rodent control program; different chemistry helps assure a high degree of effectiveness over time.

Mini-Blocks - 1 oz.

#LT87315 ..... 10 lb. pail, 160 mini-blocks
#LT87360 ..... 20 lb. pail, 320 mini-blocks

Pellet Place Packs - 1.5 oz.

#LT86204 ..... 14 lb. pail, 150 ct

CANNON™ SOFT BAIT CANNON™ Soft Bait

Cannon™ by Liphatech is the world's first bromethalin soft bait and provides simple and effective control of rodents without mixing meal bait and pellets! Low cost 8 gram placement packs reduce waste and save you money. After consuming a lethal dose, rodents cease feeding which makes your baits last longer and the active ingredient, bromethalin, kills in 24–48 hours. The no-wax formulation does not melt in high temperatures and outperforms purple wax blocks. .28 oz pouch.

#LT83904 ..... 4 lb. bag, 227 pouches

Aegis Bait Stations

- Bait placed in the feeding chamber cannot be touched by fingers or probes when the lid is fastened.
- Unique double-quartered locking barbs make the Aegis bait stations tamper resistant.
- Clear-lidded option makes monitoring quick and easy.
- Vertical and horizontal baiting rods in the Rat Station keep bait secure inside the station and away from moisture.
- Bait Stations can be attached to walls, posts or any permanent structure.
- Stations can be used both indoors and outdoors.
- RP model can be positioned vertically and is perfect for tight placements such as on rafters for roof rats.

Mouse Stations

Aegis stations provide convenient placement flexibility for vertical or horizontal mounting. Design provides capacity for two block or soft-baits.
Available in clear or black lid. Approximate Length 5-1/2", Width 4-3/8", Height (lid closed) 1-5/8".

#LT83810.....Black lid
#LT83811.....Clear lid

Rat Station w/ Black Lid

Double-tunnel design improves rodenticide consumption. Heavy-duty polypropylene construction encourages rats to enter tunnel rather than chew through the plastic. Units contain bait trays making clean-out quick and easy. Length 13-9/16", Width 10-5/8" (including hinge), Height (lid closed) 3-1/2". Key lock.

#LT83812.....Black body and lid

Rat Station w/ Clear Lid

The clear lid, with transparent panel in cover, makes bait monitoring easy and efficient. Rotating hinge, won't crack or break when opened in cold weather
Vertical and horizontal baiting rods secure bait inside station and away from moisture. The universal key opens all Aegis products. Length 13-9/16", Width 10-5/8" (including hinge), Height (lid closed) 3-1/2".

#LT83813.....Black body and clear lid

Rat Bait Cool White

Cool white box reduces inside temperatures to increase rodent activity. Mounts vertical or horizontal for greater flexibility. Key Lock to prevent access from children and non-target animals. Length 13-9/16", Width 10-5/8" (including hinge), Height (lid closed) 3-1/2".

#LT83814.....White cool box

Aegis®-RP Bait Station (Non-Locking)

Excellent choice when tamper-resistant rat bait placement is not required. Versatile, allows rats or mice to access station. Low profile permits flexible mounting in tight locations (vertical or horizontal). Rotating hinge outlasts break away living hinged bait stations. 12-7/8" long; 7-7/8" wide (including hinge); 4" high (lid closed).

#LT83861 ..... Black body and lid

Aegis®-RP Bait Station (Locking)

The locking AEGIS-RP Bait Stations are ideal for use where tamper resistant placement of rodenticides is required. Versatile, allows rats or mice to access station. Low profile permits flexible mounting in tight locations (vertical or horizontal). Rotating hinge outlasts break away living hinged bait stations. 12-7/8" long; 7-7/8" wide (including hinge); 4" high (lid closed).

#LT83860..... Black body and lid

Tube Style Bait Station

Versatile bait station can be mounted sideways or even upside down to gates, fences and wall tops. See through openings allow rodents to see light and sense air movement. Includes J-shaped bait hook and hex key. 11" high x 15" long x 2-3/4" wide.

#LU670007 ..... Tube style bait station

Multi-Catch Bait Station

The multi-catch mouse trap allows users to catch multiple mice without re-setting the trap. The zinc plated metal trap features two doors, one on each side, that contain a "see-saw" type floor, allowing mice to enter, but not exit. Mice on the inside of the trap help attract others nearby, allowing several to be caught in a short period of time. Clear plastic window on the top door allows easy confirmation of a catch.

#AGP420CL .....Multi-Catch Bait Station

10-inch Heavy Duty Tent Stake

Convenient steel spikes for anchoring bait stations penetrate the hardest ground.

#8312.....10-inch Heavy Duty Tent Stake

⚠WARNING:
This product can expose you to chemicals, including nickel, which is known to the State of California to cause cancer and birth defects or other reproductive harm. For more information, go to www.P65Warnings.ca.gov

Titan Weighted Bait Station

Ten pound, pre-installed brick holds bait station in place without stakes for faster cleaning and servicing. Perfect for use on concrete slabs such bin pads and building interiors. Holds eight one ounce blocks and includes a removable tray.

#M-33496.....Weight bait station

Vertical Bait Station

The station can be placed horizontally or vertically for a smaller footprint. Removable tray holds eight one ounce blocks for fast easy bait replacement and cleaning. Rear mounting holes for securing to fence or post.
9" W x 9" D x 4" H

#M-33446.....Vertical bait station

Rat Station

Motomco's original Bait Station with keyless design. Features a "living hinge" that can be opened & closed over 100,000 times without breaking. Holds up to one pound of bait chunxs. Includes horizontal and vertical bait securing rods.

#M-33456..... Black body and lid

Low Profile Bait Station

The Tomcat LP (Low-Profile) Rat Bait Station has a maximum height of less than 3.5" and will fit in tight spaces or underneath locations where other stations won't fit. Includes Vertical or Horizontal bait rods and fits up to four, 1oz bait chunxs.

#M-33470..... Black body and lid

Bullet Bait Station

The Bullet is an excellent, all-around station that features heavy-duty, durable construction for long-lasting use and a removable tray for easy cleaning. Single key design holds four, 1 oz bait chunxs or snap trap.

#M-33432..... Black body and lid

Tomcat Refillable Station

Tomcat Rat Killer II Refillable Bait Station contains one Tier 1 refillable rat sized bait station with 15, 30 gm Bromethalin bait blocks.

#M-22814 .....Refillable station

Glue Trap

4-pack of glue cards is coated with a powerful adhesive covered with special release paper. Non-toxic and pesticide free and an also be used for cockroaches, scorpions, spiders or other insect pests. Glue traps are 7.75" long x 5.25" wide.

#M-32509.....Weight bait station

Glue Boards

Tomcat Glue Boards are one of the most widely used ways to control mice, insects or other household pests without the use of pesticides or toxins. Hypoallergenic and scented to attract rats and mice. Can also be used for snakes, cockroaches, scorpions, spiders, centipedes, or other insect pests Tomcat mice glue boards are 4.5" long x 3.25" wide.

#M-32418 ..... Vertical bait station

Rat Traps

The Tomcat Reusable Rat Snap trap is a non-poisonous, pesticide free way to capture and remove rats or other rodent pests. Powerful snap trap can be easily set by hand or food. Patented interlocking teeth make it virtually impossible for rats to escape. Removable bait cup makes baiting traps easy and is compatible with many Tomcat Rat-sized Stations (Bullet, Rodent Station, Titan)

#M-33521 .....One pack
#M-33500.....Two pack

MOTOMCO Pest Control

JAGUAR

The most powerful single-feed anticoagulant for maximum control

JAGUAR® is tougher on rats and with the strongest single-feeding anticoagulant available – brodifacoum. JAGUAR® is especially successful in cleaning out tough mouse infestations or where resistance is suspected. Get guaranteed success with JAGUAR® tasty blend of more than 16 human food-grade ingredients.

#M-31402 ..... Jaguar® Pellet Place Packs, 25 gram, 12 lb. pail
#M-31410 ..... Jaguar® Chunx, 20 gm, 9 lb. pail
#M-31418 ..... Jaguar® Chunx, 20 gm, 18 lb. pail

Agrid3

The first and only rodenticide registered by the EPA for organic production

AGRID3 is the first and only rodenticide registered by the EPA for use in organic production. The highly palatable formulation uses the active ingredient cholecalciferol, an acute rodenticide capable of killing anticoagulant resistant rats and mice. AGRID3 has a unique mode of action that causes rats and mice to stop feeding after consuming a lethal dose, reducing the total amount of bait consumed, thus saving money. This same mode of action also gives AGRID3 a substantially reduced risk of secondary poisoning… making it excellent all-around bait.

#M-23144 ..... Agrid3 Organic Chunx, 1 oz., 4 lb. pail

HAWK

A single-feed anticoagulant ideal for superior, long-term control of rats and mice

HAWK® can kill rats and mice in a single feeding with its powerful anticoagulant bromadiolone. Use HAWK® with confidence for unsurpassed control, even against warfarin-resistant "super rats". Rats and mice die in 4 to 5 days after eating just a single feed of HAWK®. A superior formulation makes HAWK® irresistible to rats and mice.

#M-31218 ..... Hawk® Chunx, 1 oz., 18 lb. pail
#M-31270 ..... Hawk® Chunx, 1 oz., 9 lb. pail
#M-31155 ..... Hawk® Pellet Place Packs

ERAZE™ AG PELLETED BAIT

Designed to be used as a cleanout bait during a building's down cycle

ERAZE™ is a economical choice to provide fast cleanout of rodent populations when other food sources are not present, such as the down time in confinement buildings between groups. ERAZE™ powerful active ingredient, zinc phosphide, kills mice, rats and gophers in a single teaspoon size feeding.

#M-32545 ..... Eraze™ Loose Pellets, 5 lb. pail

RAMPAGE

The fastest acting rodenticide and no secondary poisoning

RAMPAGE® contains bromethalin, a non-anticoagulant, which is the key component in the fight against resistance. RAMPAGE® provides sure, fast control in one to two days. Rodents also feeding after eating a lethal dose of RAMPAGE® eat less bait so there is no secondary poisoning if pets consume dead rodents.

#M-22121 ..... RAMPAGE® Pellet Place Packs, 15 gm, 121 ct pail
#M-22249 ..... RAMPAGE® Bait Chunx, 4 lb. pail

TOMCAT

A multiple-feed anticoagulant for economical control of rats and mice

TOMCAT® is tougher than a barnyard cat for the control of rats and mice. TOMCAT® baits are manufactured with human food-grade ingredients and enhancers for a bait so palatable that rats and mice can't resist. Containing the anticoagulant dipacoinone, TOMCAT® is a multiple-feed bait that kills rats and mice in 4 to 6 days.

#M-32345 ..... Tomcat® Pellets Place Packs, 10 lb. pail
#M-32446 ..... Tomcat® Chunxs, 1 oz., 9 lb. pail

RAMPAGE

Rampage Meal Bait

Exclusive oat and grain bait formulated especially for livestock facilities with high rodent populations.

#M-22925 ..... 12 lb. pail

TOMCAT

Tomcat® Liquid Concentrate

Each pouch mixes with one quart of water. Excellent way to supplement a rodent control program especially in hot, dry conditions.

#M08140 ..... Box / 8
#M-32701 ..... 1.7 oz, pouch

HAWK

Hawk® Meal Bait

Highly palatable oat and grain formula effective when competing food sources are available.

#M-31111 ..... 50 lb. pail
#M-31125 ..... 25 lb. pail

Water Supplements

Acidified Copper Sulfate

Contains: Copper Sulfate 86.5%, Sodium Bicarbonate, & Citric Acid.
When to use it: Copper Sulfate can be used as a water acidifier, as an aid to treat mouth lesions and it can also be used to reduce feed passage.
How to Mix: Mix 1 pack per two gallons of stock solution.

#HW81600 ..... Acidified Copper Sulfate

Vinegar (Acetic Acid)

Contains: Acetic Acid 8% (#HW72500) and 22% Concentrate (#HW72501 shown)
When to use it: Varies, but typically during feed changes and when loose or watery droppings are noticed. Vinegar serves as an astringent in tightening the gut and helps decrease the incidence of feed passage and healthier looking droppings.
How to Mix: Varies, and depends on the severity of the issue. It is best to start at a low dosage of around a pint to 4 gallons of water and work up from there, but monitor water consumption and if consumption decreases with an increase in mix concentration back down on mixture.

#HW72501 ..... 22%

Vin-Sol

Contains: Mix of Sodium Acetate & Sodium Diacetate that makes Acetic Acid when mixed with water.
When to use it: Varies, but as with any other Acetic Acid product you can use it typically during feed changes and when loose or watery droppings are noticed. It serves as an astringent in tightening the gut and helps decrease the incidence of feed passage and healthier looking droppings. Can also help non Dextrose based vitamins extend their half life in stock solution. Can also be used as a water line cleaner.
How to Mix: 1 heaping teaspoon with 1 gallon of water in stock solution run once daily. As a water line cleaner mix 4 scoops per gallon of stock solution and flush after.

#HW81900-12-5 ..... Vin-Sol

Citric Acid

Contains: 100% Citric Acid
When to use it: Citric Acid is used to increase solubility in hard water conditions or when needed to help the solubility of some medications. It can also be used as a water acidifier and water line cleaner.
How to Mix: When used to improve solubility, mix 1/2 pack to 1 pack per gallon of water in stock solution. When used to clean water lines, mix 3 to 4 packs per gallon of water in stock solution.

#HW83000 ..... Citric Acid

Line Cleaners

HydroLine 34

Hydroline 34 is a 34% peroxide-based cleaner ideal for cleaning water lines.

It can reduce and eliminate biofilm and bacteria buildup in your lines which can lead to bird health issues.

#SJC0002 ..... 1 gal jug

Proxy Clean

Contains: Buffered and Stabilized Hydrogen Peroxide 50% plus Silver Complex.
When to use it: Proxy Clean removes and prevents heavy soils and biofilms in drinking systems and is non corrosive. It should be left in the drinking system in between flocks for at least 12 hours for best results.
How to Mix: When used during flocks mix at no higher than 1.66 oz per gallon of stock solution. When used in between flocks, pump straight out of container directly in system and let sit for a minimum of 12 hours, and flush afterwards until water is flowing clean from flush points.

#37648 ..... Proxy Clean

CID 2000

Contains: Hydrogen Peroxide 20%; Acetic Acid 10%; Peracetic acid 5%
When to use it: A waterline cleaner that gives you the power of O2 and acidification combined. The H2O2 removes heavy soils and the peracetic acid removes scale/mineral build-up. It is equipment friendly and contains no heavy metals. Comes in a 2.6 gallon jug. Use as directed.

#CID2000 ..... CID 2000

Siloxycide

Contains: Hydrogen Peroxide 5.00%; Silver 0.01%
When to use it: Bactericide and Virucide*
SILOXYCIDE DISINFECTANT is a patented combination of Hydrogen Peroxide plus Silver Nitrate, providing extended peroxide stability, along with previously unmatched efficacy, when compared to products containing only Hydrogen Peroxide

#061009 ..... 2.5 gal jug

General Disinfectants

Synergize

Contains: Alkyl dimethyl benzyl ammonium chloride 26.0% and Glutaraldehyde 7.0%
When to use it: Formulated for industrial use in Animal Producing Facilities as well as the following equipment in these facilities: Waterers, Feeders, Hauling Equipment, Loading Equipment, Farrowing Barns, Nurseries, Blocks, Creep Areas, and Chutes. Its unique formula penetrates and alters the structure of the cell membrane allowing itself to destroy the microorganism. Best when applied with low pressure sprayers. Contains some detergent additives and acts as a cleaner.
How to Mix: 1/2 ounce per gallon of water

#9955 ..... Synergize

Synergize Cool

Contains: Quaternay Ammonium 26.0%; Glutaraldehyde 7.00%
When to use it: Low-foaming version of Synergize™ Disinfectant. Recommended for use in cool cell systems, evaporative coolers, and other areas where low-foaming disinfecting and the control of mold, algae, and the spread of aerosol disease is a priority. Use as directed.

#24494 ..... Synergize Cool

Sani Kleen

Contains: Heavy Duty Quaternary Ammonium Chlorides
When to use it: Sani Kleen is a heavy-duty disinfectant cleaner. It is useful on numerous gram positive and gram negative bacteria. It can also be used as a sanitizer and in shoe baths if cleaned daily.
How to Mix: 2 to 3 ounces per gallon of water for all general applications. Allow at least a 10-minute contact time before residue is removed.

#24792 ..... Sani Kleen

BioCres™

Contains: Sodium hydroxide and Cresylic acid. Use the same When to use it as the Kleen Cres
How to Mix: Mix at 0.5% solution (1 gallon in 200 gallons of water) (2 ounces per 3 gallons of water) (5 mL/L).

#BIOCRES ..... Cresylic cleaner

Virkon® S

Contains: A balanced, stabilized blend of peroxygen compounds, surfactant, organic acids and an inorganic buffer system.
When to use it: Broad spectrum virucidal disinfectant for livestock disease prevention and control. Proven highly effective against 65 strains of virus in over 19 viral families, 400 strains of bacteria and over 100 strains of fungi including Avian Influenza (H5N1), Newcastle Disease, Classical Swine Fever (Hog Cholera) and Foot and Mouth Disease.
How to Mix: 1% is recommended for Poultry applications: 1.3 ounces of Virkon® S per gallon of water. If solution contacts metal surfaces or equipment, wash off residue with water after 10 minutes.

#361221 ..... Virkon® S

Virocid Disinfectant

Contains: Alkyl dimethyl benzyl ammonium chloride 17.7%, didecyl dimethyl ammonium chloride 8.1%, glutaraldehyde 11.2%.
When to use it: A highly-concentrated and broad spectrum disinfectant effective against Viruses, Bacteria & Fungi.
How to Mix: To disinfect hard non-porous surfaces (livestock equipment, floors, walls, table tops, counter tops), apply a 0.25% (1:400 parts) solution to thoroughly wet surface. Spray the surface and let stand for 10 minutes. VIROCID is a concentrate that can be used with a mop, sprayers, sponge, or by soaking. Heavily soiled surfaces should be pre-cleaned prior to disinfection. All food contact surfaces must be thoroughly rinsed with potable water after disinfection.

#BV061 ..... Virocid Disinfectant

Quad-A-Mone

Contains: Dimethyl benzyl ammonium chloride 10% and Dimethyl ethylbenzyl ammonium chloride 10%
Usage: A 20% quad with a powerful germicide action for use in poultry, and for general farm use. Fast acting. Effective in hard water.

#CVE51 ..... 1 Gal

Dyne O Might

Contains: Propionic Acid 25 – 50%; Polyoxyethylene-Polyoxypropylene Iodine Complex 0.42%; Phosphoric Acid 5 – 20%
Why use it: Provides disinfection in the presence of high organic matter, Litter pH adjustment, can inhibit dust and help control ammonia. Also proven efficacy against vegetative clostridium perfringens known to cause Gangrenous dermatitis.

#36730 ..... 5 Gal
#39832 ..... 1 Gal

Universal Barn Cleaner

Contains: Foam Boosters and Chelating Agents
When to use it: A general purpose cleaner and deodorizer.
How to use it: poultry, swine, farm animal housing mix at a rate of 1 part to 250 - 500 parts of water.

#D12568757 ..... Universal Barn Cleaner

General Disinfectants

1.75% Iodine

Use for sanitation of drinking water and general disinfection.

#SJC0001 ..... 1-gallon container

Barnstorm

Contains: Phosphoric Acid 10-35%; Dodecylbenzene Sulfonic Acid 5-35%
When to use it: Heavy-duty, concentrated cleaner and descaler. It has a unique blend of specially formulated acids and a high-foaming detergent designed to remove both organic and inorganic soils from surfaces prior to disinfection. The mixture penetrates through the "biofilm" left behind on walls, floors and crates.

#MS3595 ..... Barnstorm

Kenosan™

- Unique formula based on new technologies
- Sticky and long-lasting foam
- Extreme dirt penetrating capacity and excellent at breaking down Biofilms.
- Very economical use at 1% concentration.
- Non corrosive
- Contains Sodium Hydroxide and Ethanol
- With Kenosan as part of your disinfection program your disinfectants used like Virocid will be more effective and able to penetrate the pathogens for eradication.

#BV119 ..... 5.3 gal

Tek-Trol II

Tek-Trol II Disinfectant is a synthetic detergent concentrate combined with high-powered 20.6% multiple chlorphenolic disinfectants. Dilution rate of 1 oz per gal of water.

#TEK-003-2 ..... Gallon liquid

Odor Control

Odor Pro

Odor Eliminator is designed to remove odors from kennels, offices, vehicles and even clothing. Spray into the air or use as a rinse additive in the washing machine. Anti-Bacterial Deodorizing Body Wash 1 Gallon. Designed to neutralize offensive odors. Simply use as normal hand soap or shampoo. Leave on hair and body for approx. 2 minutes for best effectiveness.

#109071A ..... 1/2 gal. Bottles
#109074 ..... Body Wash 1 gal

Tek-Trol Aerosol

A spot disinfectant for use on boots, clothing, vehicles and hand tools. Non-staining, quick drying and ideally suited for service personnel moving from location to location.

#TEK-001 ..... 17 oz. aerosol spray can

Cool Cell Treatments

Triple-C by Proxy Clean Cool Cell Descaler

Triple-C® is a proprietary blend of acids and surfactants designed to clean and remove scale and mineral buildup from cool cell pads. Why use it: Triple-C® provides a unique scrubbing action that effectively loosens and removes scale, mineral and heavy metal deposits from cool cell pads. How to Mix: Add 1 Qt to recirculation tank.

#PCP05 ..... 1 quart

Cool-N-Klean Descaler

Contains: Surfactants and organic acids.
When to use it: Cool-N-Klean is a replacement for Aqua Max. It is a cleaner and descaler for water lines and cool cell pad systems.
How to Mix: Apply Cool-N-Klean per manufacturer's recommendations which are listed on the product jug depending on the type of application.

#I52996 ..... 1 gallon

DeVere Powder Descaler

Contains: Citric acid, a buffer and quaternary ammonium chloride
Why use it: When used according to directions, this product will remove all types of mineral scale without harming evaporative cooling pads. This product also decreases the need to clean headers and nozzles that can become plugged with minerals.
How to mix: Add product to reservoir tank to make 0.5% (by weight) solution (4 lbs. per 100 gals of water).

#MPD8 ..... 8 lb
#MPD100 ..... 100 lb

FASTKLEEN

Use: To remove calcium or mineral deposits on cool cell pads.
How to Use: How to use: Dilute 1/2 oz with one gallon of water. Circulate through system for one hour. Flush with fresh water. For startup, shut pump off. Saturate pads with one gallon of Fast Kleen mixed with 25 gallons of water. Rinse pads with water.

#FASTKLEEN ..... 1 gallon

SCI-62 Algaecide

Contains: Copper Sulfate/ Sulfuric Acid mix
How to use: To control the growth of algae, add 1 to 2 ounces of SCI-62® to the storage tank at the start of the season and 1 to 2 ounces once per week during periods of use and after flushing the sump

#59129 ..... 1 gallon

HOG SLAT® HEAVY DUTY CHORE CART

The Chore CART HD is built to last! All of the features that are important to the producer are addressed in the no-nonsense design.

- Durability
- Maneuverability
- Capacity
- Clean-ability
- Function and Value!

Item#	Description
8320301100	Chore Cart HD
8320300100	Frame for cart (blue and green cart)
8321000000	16" wheel (blue and green cart)
8321300000	Blue tub (blue and green cart)
8331910000	4" Swivel wheel (blue cart only)

⚠ WARNING:
This product can expose you to chemicals, including nickel, which is known to the State of California to cause cancer and birth defects or other reproductive harm. For more information, go to www.P65Warnings.ca.gov

POLY-TUF® FEED CART

- Polyethylene Tub
- 11 bushel or 600 lbs.
- 44" L x 27" W x 35" H
- 8 x 2.5" semi-pneumatic tires

Item#	Description
RMP11-4W	11 Bushel Semi-Pneumatic Tires
RMP7-4w	7 Bushel Semi-Pneumatic Tires

⚠ WARNING:
This product can expose you to chemicals, including nickel, which is known to the State of California to cause cancer and birth defects or other reproductive harm. For more information, go to www.P65Warnings.ca.gov

TONG STIK TONG-STIK

Tong Stik is the heavy-weight pick-up tool designed rugged enough for farm use!

Item#	Description
HS549-36	Tong Stik 36" long
HS549-30	Tong Stik 30" long

⚠ WARNING:
This product can expose you to chemicals, including nickel, which is known to the State of California to cause cancer and birth defects or other reproductive harm. For more information, go to www.P65Warnings.ca.gov

PLASTIC FILM

Item#	Description
805571	6 Mil 6' x 100' (Clear)

HIGHCROFT CO. FEED CARTS

Heavy poly construction pneumatic wheels with semi-pneumatic casters.

MODEL 600

#08-1009 #06-1020

MODEL 800

#08-1009 #08-1008

MODEL 9

#09-1017 #09-1018

Item#	Description
109022	240 lb. feed cart, L 39-1/4" x W 18-1/4" x H 35" (6 cu. ft.)
08-1009	Semi-pneumatic caster wheel, 10" x 1-3/4"
06-1020	Fixed Wheel, 10-3/4" x 1-3/4"
10902	320 lb. feed cart • L 44-1/4" x W 20-1/4" x H 37" (8 cu. ft.
08-1008	Fixed pneumatic wheel
10903	360 lb. feed cart, L 53-1/2" x W 19-1/2" x H 34-1/2" (6 cu. ft.)
09-1017	Pneumatic caster wheel, 410/350 x 4"
09-1018	Fixed Pneumatic wheel, 480/400 x 8.75"

⚠ WARNING:
This product can expose you to chemicals, including nickel, which is known to the State of California to cause cancer and birth defects or other reproductive harm. For more information, go to www.P65Warnings.ca.gov

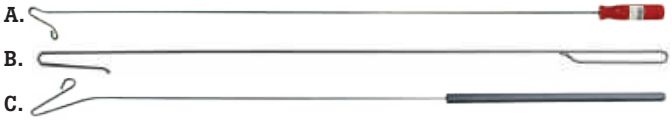

FOWL CATCHERS/CHICKEN HOOKS

Item#	Description
A) 52122	Fowl Catcher, plastic red handle
B) 27100	Heavy duty rooster/turkey hook
C) HH-012	Gray handled hook

⚠ WARNING:
This product can expose you to chemicals, including nickel, which is known to the State of California to cause cancer and birth defects or other reproductive harm. For more information, go to www.P65Warnings.ca.gov

HYDRATED LIME

Item#	Description
057320	50 lb. Bag

Nest Pads

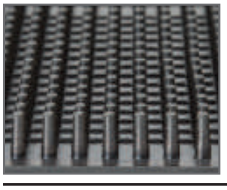

Rubber fingers cushion and support eggs. Open design allows debris to fall through resulting in a cleaner nest.

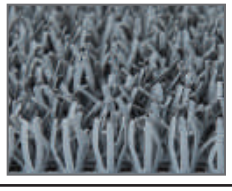

The original AstroTurf® nesting pad.

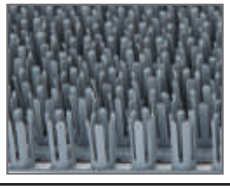

AstroTurf® NXT pads are the next generation of turf pads. Rounded tips and straighter blades mean cleaner eggs. New plastic formulation and thicker, stronger base extends pad life.

Item#	Description	Size	OEM#
#HS601	Finger Style	12.75" x 11.65"	GC5000078
#HS602A	Finger Style	5.63" x 9.75"	GC5000079
#HS603-1	Turf Style, Grey	5.6" x 9.6"	G07101294
#HS603-2	NXT Style, Grey	5.6" x 9.6"	AGL16-37197, DPPB5X9
#HS604-1	Turf Style, Grey	11.75" x 12.875"	G07099166, AGL16-37193
#HS604-2	NXT Style, Grey	11.5" x 12.875"	-

A Hog Slat exclusive, the Barngard Door™ series has proven to deliver value beyond what is available in the marketplace.

The advanced technology and flexible platform of the Barngard Door™ series continues to deliver value. Featuring adjustable weatherstrips, header sweep and sill sweep. The precision folded jambs, baked bright white finish, 4" x 4-1/2" hinges and the industry's best warranty are sure to make this door an industry standard for years to come.

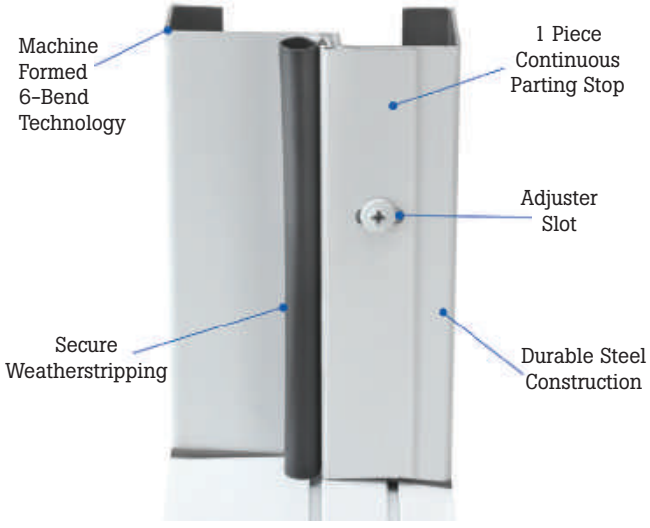

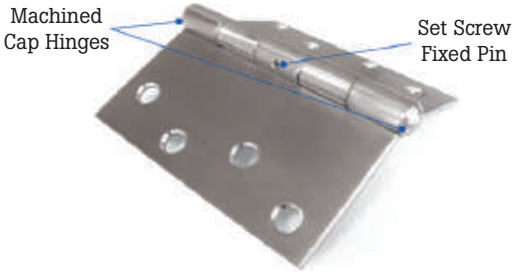

Item#	Description
BG882668	Door Complete Barngard R88 2'6" x 6'8"
BG882868	Door Complete Barngard R88 2'8" x 6'8"
BG883068	Door Complete Unit Barngard R88 3'0" x 6'8"
BG882668W	Door Complete Barngard R88 2'6" x 6'8" Steel W/22" x 22"
BG883068W	Door Complete Barngard R88 3'0" x 6'8" W/22" x 22" Lite
BG884068	Door Complete Barngard R88 4'0" x 6'8"
BG886068	Door Complete Barngard R88 Double Door 6'0" x 6'8"
BG28804Y	Door Barngard White Fire Rated, RO 40-1/4" x 82-14"

⚠ WARNING:
This product can expose you to chemicals, including nickel, which is known to the State of California to cause cancer and birth defects or other reproductive harm. For more information, go to www.P65Warnings.ca.gov

ELECTRONIC ENTRY UNIVERSAL DOOR LEVER

Item#	Description
806213	Brass/Satin Chrome

⚠ WARNING:
This product can expose you to chemicals, including nickel, which is known to the State of California to cause cancer and birth defects or other reproductive harm. For more information, go to www.P65Warnings.ca.gov

BARN DOOR

Specialty door designed to handle the extreme conditions of the confinement buildings. Insulated foam core is framed with dimensional lumber and both sides covered with a aluminum skin laminated to 3/8" plywood. The edges are capped with a rugged PVC U-channel. Doors are pre-hung with (3) 8" strap hinges on to the 2' x 4' frame and fully weather-stripped. Door slab comes pre-drilled for installation of the Dura Latch. **Now with stainless steel strap hinges.**

Item#	Description
2668LSS	30" Left barn door
2668RSS	30" Right barn door
3668LSS	36" Left barn door
3668RSS	36" Right barn door
MMS3668KI	Barn door trim kit
1043	8" tee hinge w/ removable pin

The Destructor

- 500 lb. capacity
- 6,000 lbs.

#02222SSLP..... The Destructor
#52531-SBURN..... Destructor w/Afterburner

⚠ WARNING:
This product can expose you to chemicals, including nickel, which is known to the State of California to cause cancer and birth defects or other reproductive harm. For more information, go to www.P65Warnings.ca.gov

The Destructor Jr.

- 100 lb. capacity
- 2,300 lbs.

#52350.....The Destructor Jr.
#52350-SBURN..... Destructor Jr. w/Afterburner

⚠ WARNING:
This product can expose you to chemicals, including nickel, which is known to the State of California to cause cancer and birth defects or other reproductive harm. For more information, go to www.P65Warnings.ca.gov

TC-275

- 275 lb capacity
- Weight: 3,200 lbs.

#52533D-SBURN...Diesel, Secondary Afterburner
#52533-SBURN... LP Gas, Secondary Afterburner
#52533D..... Diesel
#52533..... LP Gas

⚠ WARNING:
This product can expose you to chemicals, including nickel, which is known to the State of California to cause cancer and birth defects or other reproductive harm. For more information, go to www.P65Warnings.ca.gov

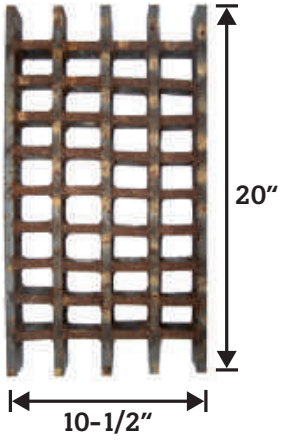

Heavy Duty Grate

#NI01111JR.....for Destructor Jr., Individual

⚠ WARNING:
This product can expose you to chemicals, including nickel, which is known to the State of California to cause cancer and birth defects or other reproductive harm. For more information, go to www.P65Warnings.ca.gov

LP Gas Incinerator

1) #NI6421-59.....Tube Igniter
2) #NI8400-00..... Regulator
3) #NI6405-00.....Block Ignitor Inlet
4) #NI6412-97..... Assembly
5) #NI6401-90..... Shutter Replacement Kit
6) #NI6407-30..... Gasket Flange
7) #NI6407-90.....Mounting Flange Kit
8) #NI6406-05.....Tube Blast LP & NG
9) #NI6404-90.....Screw Input Adjustment
10) #NI6460-00.....Igniter Assembly
11) #NI6413-09..... Barrier Ground Kit
12) #NI6464-00.....Motor
13) #NI6457-00.....Ignitor Electrode
14) #NI6403-00.....Manifold
15) #NI6452-50.....Gas Valve
16) #NI6416-90.....Inlet Ring & Screen Replacement
17) #NI8425-18.....Switch Terminal
18) #NI6410-00..... Wheel Blower
19) #NI6400-80.....Housing for Blower
20) #NI8429-03..... Control Board Honeywell

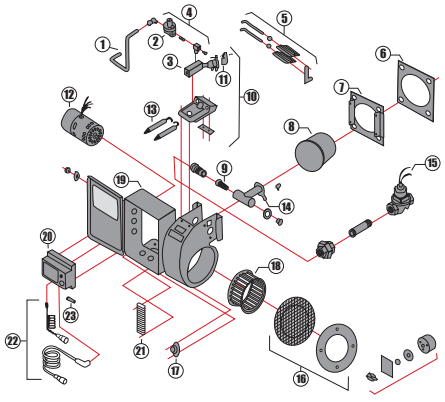

21) #NI8408-42..... Strip Terminal
22) #NI6458-50.....Wire Boot Kit
23) #NI8408-76.....Fuse
NS) #NI3200TC.....Control Cal Incinerator
NS) #MKS2PIAC120..... Relay

⚠ WARNING: This product can expose you to chemicals, including nickel, which is known to the State of California to cause cancer and birth defects or other reproductive harm. For more information, go to www.P65Warnings.ca.gov

Becket Diesel Burner

1) #NIRWB5874BKU.....Burner Housing Assy.
2) #NIRWB3709..... Air Shutter
3) #NIRWB5151501.....Air Band
4) #NIRWB3493..... Escutcheon Plate
#NIRWB5941.....Adjusting Plate Assy.
5) #NIRWB5432.....ADJ Mounting Flange
6) #NIRWB2139..... Hole Plug
7) #NIRWB2456U.....Motor 1/7 HP Becket
#NIRWB4189.....Mounting Screws
9) #NIRWB2999U..... Blower Wheel
10) #NIRWB2454..... Coupler Driver for Pump
12) #NIRWB2256..... Pump Nozzle Port Fitting
13) #NIRWB5636..... Connector Tube Assy.
14) #NIRWB51771U....Transformer Fuel Oil model
15) #NIRWB31232.....Hinge to Housing Gasket
17) #NIRWB5880..... Low Firing Baffle
18) #NIRWB5780.....Ignitor (electrode only)
19) #NIRWB2885.....Pedestal Support Kit
20) #NIRWB5606.....Extended Pedestal Kit

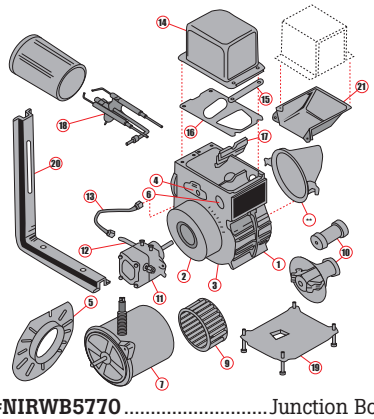

21) #NIRWB5770.....Junction Box Kit
#NIRWB550274.....Probe Wires
#NI101343-001.....Ignition Control
#NIRWB5919.....Probe Kit
#NIRWB7101U..... Valve Oil Solenoid
#NIRWBAF65XPT.....Tube Air Combination
#NIRWB5878.....Trans Ignition Assembly

⚠ WARNING: This product can expose you to chemicals, including nickel, which is known to the State of California to cause cancer and birth defects or other reproductive harm. For more information, go to www.P65Warnings.ca.gov

Wayne Diesel Burner for Burn Easy and Valco Incinerators:

1) #HS9074.....Motor
2) #RK1202.....Power Cord
3) #523597..... Blower Fan
4) #RK1204.....Fan & Burner Housing
5) #RK1205.....Transformer
6) #RK1642.....Controller (New Style)
NS) #RK1243B.....Controller Board
7) #RK1235.....Slot Cover Plate
8) #RK1207..... Inner Air Band
9) #RK1208..... Outer Air Band
10) #RK1209..... Drive Coupler
11) #RK1210.....Oil Line Assy.
12) #523598.....Fuel Pump Suntec
12) #RK1211D.....Fuel Pump Danfoss
16) #5235992.....Gun Assy.
17-21) #RK1230..... Air Tube Assy.
NS) #FD6H.....6 Hr. Timer
20) #RK1216..... Gasket
Part of 16) #RK1224..... Hold Down Clamp

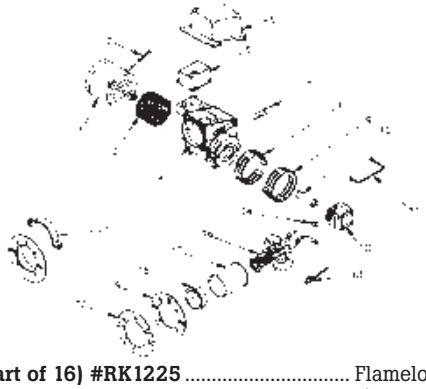

Part of 16) #RK1225..... Flamelock
Part of 16) #RK1226..Electrode Assy. w/Buss Bar
Part of 16) #RK1227..... Buss Bar
NS) #RK1005..... After Burner Nozzle 1.10gph
NS) #RK1006..... Main Burner Nozzle 2.25gph
NS) #RK1237.....Fuel Oil Shut Off Valve
NS) #RK1238.....Probe Heat Plug

⚠ WARNING: This product can expose you to chemicals, including nickel, which is known to the State of California to cause cancer and birth defects or other reproductive harm. For more information, go to www.P65Warnings.ca.gov

BURN-EASY
R&K INCINERATOR, INC.

BURN-EASY INCINERATORS

⚠ WARNING:
This product can expose you to chemicals, including nickel, which is known to the State of California to cause cancer and birth defects or other reproductive harm. For more information, go to www.P65Warnings.ca.gov

COMPLETE UNITS

ITEM#	MODEL	DIAMETER	DOOR	DOOR DIMENSIONS	CAPACITY
RK3102	Model 12 Afterburner Oil	2'x12"	N/A	N/A	N/A
RK3102-LP	Model 12 Afterburner LP	2'x12"	N/A	N/A	N/A
RK3102-NG	Model 12 Afterburner NG	2'x12"	N/A	N/A	N/A
RK3100	Model 20 Afterburner Oil	4'x20"	N/A	N/A	N/A
RK3100-LP	Model 20 Afterburner LP	4'x20"	N/A	N/A	N/A
RK3100-NG	Model 20 Afterburner NG	4'x20"	N/A	N/A	N/A
RK4280	Model 428 WO/Grate Oil	8'x42"	Single Door-Winched	31"x66"	1,200 lbs.
RK4280-LP	Model 428 WO/Grate LP	8'x42"	Single Door-Winched	31"x66"	1,200 lbs.
RK4280-NG	Model 428 WO/Grate NG	8'x42"	Single Door-Winched	31"x66"	1,200 lbs.
RK529	Model 529 Heat Lined Diesel	9'x52"	Single Door-Winched	43"x77"	2,500 lbs.

#523598

#52359

#RK1226

#5235992

#RK1209

#RK1205

#RK1237

#HS9074

#RK3806

#RK1005

#RK1006

#523597

#523595

#RK1243B

REPLACEMENT PARTS

Item#	Description
HS9074	Motor 1/5 HP 3450 RPM 50/60 Hz Burn Easy Incinerator
52359	New style heat probe for Burn Easy incinerator
RK1205	Transformer Igniter Coil for Burn Easy Incinerator
523595	Control Box Complete for Burn Easy Incinerator
523597	Fan Blower for Burn Easy Incinerator
523598	Pump Fuel for Burn Easy Incinerator
5235992	Gun Assembly For Incinerator
RK1005	Nozzle for after burner 1.10 Gal Incinerator
RK1006	Nozzle for Main Burner 2.25 Gal Incinerator
RK1007	Nozzle 2GPH for Burn Easy Incinerator
RK1206	Spring for 5235901 Transformer
RK1209	Drive Coupler for Burn Easy Incinerator
RK1226	Igniter for Burn Easy Incinerator

⚠ WARNING:
This product can expose you to chemicals, including nickel, which is known to the State of California to cause cancer and birth defects or other reproductive harm. For more information, go to www.P65Warnings.ca.gov

Item#	Description
RK1230	Tube Air Assembly for Incinerator
RK1237	Shut Off Fuel for Burn Easy Incinerator
RK1238	Probe Heat Plug for Burn Easy Incinerator
RK1243B	Board Control for Control Box 523595 Burn Easy Incinerator
RK1245	Box Only for Controls pre Drilled Bottom & Top
RK1246	Transformer 12V Burn Easy Incinerator
RK1248	Decal Only for Burn Easy Controller
RK3802	Grate for 500 LB Burn Easy Incinerator
RK3803	Grate for 700 Lb Burn Easy 3 Per Set 22" X 24 1/2"
RK3806	Grates for 1200LB Burn Easy Incinerator (Set of 5) 15" X 27"
RK150012	Fuel Nozzle, 1.35
RK150013	Fuel Nozzle, 1.50

ELITE ROLLER CHAIN

- **High precision roller chain designed to provide the user with better performance.**
- **ELITE chains have wear and fatigue limit values superior to minimum requirements of DIN/ISO Standards.**
- **ELITE chain plates with optimum geometry are precision formed and heat treated.**
- **ELITE pins feature a smooth, extra hard surface for increased wear resistance.**
- **ELITE bushes are absolutely cylindrical and either seamless or wound**
- **ELITE uses only seamless rollers made of cold-extrusion steel with a specifically treated surface.**

Item#	Description
EL35R	35 Riv Roller Chain
EL35R-10	35 Riv Roller Chain - 10' Box
EL35R-50	35 Riv Roller Chain- 50' Box
EL40R	40 Riv Roller Chain
EL40R-10	40 Riv Roller Chain- 10' Box
EL40R-50	40 Riv Roller Chain- 50' Box
EL41R	41 Riv Roller Chain
EL41R-10	41 Riv Roller Chain - 10' Box
EL41R-50	41 Riv Roller Chain- 50' Box
EL50R	50 Riv Roller Chain
EL50R-10	50 Riv Roller Chain- 10' Box
EL50R-50	50 Riv Roller Chain- 50' Box
EL60R	60 Riv Roller Chain
EL60R-10	60 Riv Roller Chain - 10' Box
EL60R-50	60 Riv Roller Chain - 50' Box
EL40RC-1/2	Roller Chain 1/2" 48I (BD39-00-4030)
EL46	Roller Chain 3/8" 46I (BD39-00-4728)
EL71	Roller Chain 1/2" 71I (BD39-00-4557)
EL2X914	Roller Chain 2 X 914mm (BD38-87-3009)
METRIC	
EL08B-1R-10	08-B-1 Riv Roller Chain - 10' Box
EL12B-1R	12B-1 Riv Roller Chain
EL12B-1R-10	12B-1 Riv Roller Chain -10' Box

ELITE CONNECTING LINKS

Item#	Description
EL35RC	Connecting Link Elite 35 Riv
EL40RC	Connecting Link Elite 40 Riv
EL41RC	Connecting Link Elite 41 Riv
EL50RC	Connecting Link Elite 50 Riv
EL60RC	Connecting Link Elite 60 Riv
METRIC	
EL08B-1RC	Connecting Link Elite 08B-1 Riv
EL12B-1RC	Connecting Link Elite 12B-1 Riv

ELITE OFFSET LINKS

Item#	Description
EL35RO	Connecting Offset Link 35 Riv
EL40RO	Connecting Offset Link 40 Riv
EL41RO	Connecting Offset Link Elite 41 Riv
EL50RO	Connecting Offset Link 50 Riv
EL60RO	Connecting Offset Link 60 Riv
METRIC	
EL08B-1RO	Connecting Offset Link Elite 08B-1 Riv
EL12B-1RO	Connecting Offset Link Elite 12B-1 Riv

⚠ WARNING:
This product can expose you to chemicals, including nickel, which is known to the State of California to cause cancer and birth defects or other reproductive harm. For more information, go to www.P65Warnings.ca.gov

Rotomax Nozzle

Rotating head delivers a powerful blast to make short work out of your toughest cleaning jobs. The best rotating nozzle on the market.

- Adjustable fan pattern, can lock down to 0°
- Lighter weight – Less fatigue
- Ceramic nozzle protected by plastic outer shield
- Repair kit is half cost; Less expensive to rebuild
- 9.6 oz.

Item#	Color	Pressure Range	Flow Range	Size
#799114	RED	1300–2000 PSI	2.1–2.6 GPM	4.5
#799115	BLUE	1450–3500 PSI	2.9–4.06 GPM	5.5
#799116	BLACK	1450–3500 PSI	4.2–5.5 GPM	6.5
#725917	Repair Kit, replacement washers, seals and tips			

⚠ WARNING:
This product can expose you to chemicals, including nickel, which is known to the State of California to cause cancer and birth defects or other reproductive harm. For more information, go to www.P65Warnings.ca.gov

Spray Gun Lances

- 1/4" MNPT

1) #LG36ZH..... 1/4" x 36", 4000 PSI , Zinc plated w/ grip & side handle
2a) #SA07000470..... 1/4" x 36", 6000 PSI, Zinc plated w/ grip
2b) #LG36SS..... 1/4" x 36", 4000 PSI, Stainless Steel, w/ grip
3) #LG18FLEX.....1/2" x 18", 2000 PSI, Zinc plated, Flexible grip
4) #LG90HNDL.....Adjustable grip for lance

⚠ WARNING:
This product can expose you to chemicals, including nickel, which is known to the State of California to cause cancer and birth defects or other reproductive harm. For more information, go to www.P65Warnings.ca.gov

Dirt Killer Nozzles

The Industrial Dirt Killer (IDK) features a slower spinning turbine that creates a larger water droplet with greater impact making it an outstanding choice for cleaning concrete and steel. Rebuilding the IDK nozzles is easy with the rebuild kit which includes all the internal parts necessary to make it like new. Rated use at 4700 PSI and 180° water temperature with 1/4" male threads. The Dirt Killer (DK, part# DK97410713) has high speed rotating turbine which delivers the punch of a 0° nozzle with the coverage of a 25° fan. This effectively gives it 10 times the cleaning power of a standard flat tip nozzle. Rated at 3200 PSI and 180° water temperature with 1/4" female threads.

NOZZLES

#DK97410711.....Nozzle Dirt Killer 8.0 IDK Red
#DK97410712.....Nozzle Dirt Killer 5.5 IDK Black
#DK97410713.....Nozzle Dirt Killer 4.5 DK Yellow
#DK97410714.....Nozzle Dirt Killer 5.5 DK Black
#DK97410715.....Nozzle Dirt Killer 7.0 IDK Blue
#DK97410717.....Nozzle Dirt Killer 10.0 IDK Brown
#DK97410718.....Nozzle Dirt Killer 4.5 IDK Yellow Or Green

REPAIR KITS

#DK9741097.....Nozzle Dirt Killer Replacement Kit 4.5 DK
#DK97410971.....Nozzle Dirt Killer Replacement Kit 5.5 IDK Black
#DK97410972.....Nozzle Dirt Killer Replacement Kit 7.0 IDK Blue
#DK97410973.....Nozzle Dirt Killer Replacement Kit 8.0 IDK Red
#DK97410975.....Nozzle Dirt Killer Replacement Kit 10.0 IDK Brown
#DK97410976.....Nozzle Dirt Killer Replacement Kit 4.5 IDK Yellow
#DK97410978.....Nozzle Dirt Killer Replacement Kit 5.5 DK Black

⚠ WARNING:
This product can expose you to chemicals, including nickel, which is known to the State of California to cause cancer and birth defects or other reproductive harm. For more information, go to www.P65Warnings.ca.gov

Premium High-Pressure Hose

3/8" double braid hose with NPT fittings and bend restrictors. 6000 PSI and 250 degree maximum temperature. Fittings included.

#HFH6000-10.....3/8" x 10'
#HFH6000-40QC....3/8" x 40' 5800 Msc, Quick Connects
#HFH6000-50.....3/8" x 50'
#HFH6000-75.....3/8" x 75'
#HFH6000-100.....3/8" x 100'
#HFH6000-50NM....3/8" x 50' 6000 PSI Non Marking, Grey
#HFH6000-75NM.....3/8" x75' 6000 PSI Non Marking, Grey

⚠ WARNING:
This product can expose you to chemicals, including nickel, which is known to the State of California to cause cancer and birth defects or other reproductive harm. For more information, go to www.P65Warnings.ca.gov

5-Pack High Pressure Spray Tips

Kit includes five different tips. 0 for cutting, 15 for chiseling, 25 for flushing, 40 for washing and a chemical nozzle.

#97331.....5-Pack High Pressure Spray Tips

⚠ WARNING:
This product can expose you to chemicals, including nickel, which is known to the State of California to cause cancer and birth defects or other reproductive harm. For more information, go to www.P65Warnings.ca.gov

Standard Nozzle

- Harden Stainless Steel construction
- 1/4" NPT
- 15° flat spray pattern
- gpm @ 3000 psi

#5330090..... 1512 tip, #12 orifice, 6.93 gpm
#5330088..... 1508 tip, #08 orifice, 10.93 gpm
#5330092..... 1530 tip, #30 orifice, 25.98 gpm
#5330093..... 1560 tip, #60 orifice, 51.96 gpm

⚠ WARNING:
This product can expose you to chemicals, including nickel, which is known to the State of California to cause cancer and birth defects or other reproductive harm. For more information, go to www.P65Warnings.ca.gov

Pressure Washer Gun

- 3/8 FMPT inlet x 1.4" FMPT outlet
- 5000 PSI maximum
- 10 GPM
- 300° maximum temperature
- Stainless steel valve components

#LG5000.....Giant Gun Jet

⚠ WARNING:
This product can expose you to chemicals, including nickel, which is known to the State of California to cause cancer and birth defects or other reproductive harm. For more information, go to www.P65Warnings.ca.gov

"Easy Pull" Trigger Spray

- 3/8" FMPT inlet x 1" FMPT outlet
- 5000 PSI maximum
- 12 gallon minimum
- 300° maximum temperature
- Stainless steel valve components

#SA202305600..... Easy Pull Trigger Spray

⚠ WARNING:
This product can expose you to chemicals, including nickel, which is known to the State of California to cause cancer and birth defects or other reproductive harm. For more information, go to www.P65Warnings.ca.gov

High-Pressure Nozzle Filter

- Recommended for use with rotating nozzles
- Male plug not included

#799602 ..... 1/4" MPT x 1/4" FPT

⚠ WARNING:
This product can expose you to chemicals, including nickel, which is known to the State of California to cause cancer and birth defects or other reproductive harm. For more information, go to www.P65Warnings.ca.gov

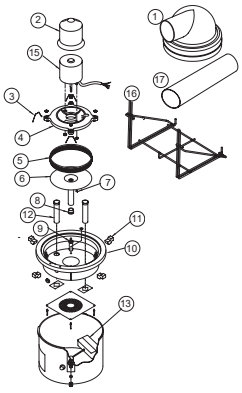

TRION HUMIDIFIER MODEL 707 PARTS LIST

Item#	Description
520280	Complete 115V
1) 520240	Discharge Dome
2) 5202001	Motor Cover
3) 520219	Retainer Clip
4) 52031	Motor Base
5) 520245	Diffusing Screen
6 & 8) 52030	Impeller & Impeller Pump (kit)
7) 52032	Screw, Set Cup
9) 520294	Vibration Damper

Item#	Description
10) 5208201	Center Pan
11) 52029	Center Pan Support
12) 52802827	Drip Tube
13) 520292	Float & Valve Assembly
14) 520295	Pan
15) 520296-001	Motor 115V
16) 5202186	Mounting Bracket
Ni) 520284	Humidistat

HURRICANE ULTRA II

#CD62150-1

The Hurricane Ultra II ULV mister is an electric portable aerosol applicator that dispenses both oil and water-based products. Features solid state metering device, low profile one-gallon tank to resist tipping and controllable droplet sizes. Adjustable flow rate of 0-4.5 gph and 5.50 particle size. 12" L x 12" W x 14" H.

TRI-JET

#TRIJET110

Chemical fogger or humidity control is simple with the Commander "Tri-Jet" Fogger. The combination of adjustable valve and the tornado action nozzle allows you to maximize mist up to 30 feet directionally. Three counter rotating vortex nozzles dispense an adjustable particle size of 15-30 microns from either oil- or water-based chemical solutions. 1 gallon tank capacity. Aluminum construction with chemical resistant vinyl tubing.

⚠ WARNING:
This product can expose you to chemicals, including nickel, which is known to the State of California to cause cancer and birth defects or other reproductive harm. For more information, go to www.P65Warnings.ca.gov

VALVE ASSEMBLY

Item#	Description
525159	Float valve assembly

REPLACEMENT COMPRESSORS

Item#	Description
525839	for 13000-15E
525832	for 6000
40006E	for 4000-6E
G900015ECOMP	for 9000

BLADES

Item#	Description
525833	for 9000-15e
525836	for 18000-27e
525834	for 9000-15e
525831	for 6000 Burch
525833	for 9000-15e

⚠ WARNING:
This product can expose you to chemicals, including nickel, which is known to the State of California to cause cancer and birth defects or other reproductive harm. For more information, go to www.P65Warnings.ca.gov

BURCH COOLER CAPACITORS

#35370

#G900015ECAP

Item#	Description
35370	for 6000 Burch Cooler
G900015ECAP	for 900015E Cooler

⚠ WARNING:
This product can expose you to chemicals, including nickel, which is known to the State of California to cause cancer and birth defects or other reproductive harm. For more information, go to www.P65Warnings.ca.gov

HI LO THERMOMETER

Records the high and low temperature day and night. Also great for use in egg coolers

Item#	Description
59630	Hi Lo Thermometer

HUMIDIFIER PAN ONLY

Item#	Description
525852	for 6000-10e
520281	for 9000-15e

EGG COOLER MOTOR

Item#	Description
52586	50W Model 6000 Inside Fan Motor & 9000 Inside & Outside
52585	35W Model 6000 Outside Fan Motor & Model 4000 Inside & Outside
525851	1/4 HP Fan Motor for Models 13K,18K,& 24K

⚠ WARNING:
This product can expose you to chemicals, including nickel, which is known to the State of California to cause cancer and birth defects or other reproductive harm. For more information, go to www.P65Warnings.ca.gov

HEATER ELEMENTS

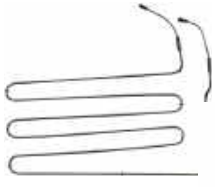

Item#	Description
52587	500 Watt
525157	1000 Watt for 13000 cooler
525853	for 6000-10e
525854	for 9000-15e

BURCH EGG ROOM COOLERS

Burch manufactures packaged cooling units which can be equipped with 2 stage room heating to control a desired temperature in egg holding rooms all year long.
A humidification system is also available to protect egg shells from losing moisture in the egg holding room. Hatching egg units are able to cool down as low as 55 degrees F while table eggs units cool as low as 40 degrees F.
Manufactured using tough, durable powder coated steel cabinets, these self contained, through the wall, units require little maintenance and are simply built to enable easy service in the field. Shipped fully charged, installation is very quick and conditioning of eggs can begin in a matter of minutes.

Additional options available including custom painted exterior housing. Call for details.

Hatching Egg Coolers

DESCRIPTION	MODEL	OPTIONS	VOLTS	BTU	MIN TEMP	EGG HOLDING ROOM CU FT	WALL ROUGH OPENING (H x W)
BURCH Hatching Egg Cooler	3000-5E	Room Heater, Humidifier	115	5800	55 F	920	20.25 x 20.25
BURCH Hatching Egg Cooler	4000-6E	Room Heater, Humidifier	220	8300	55 F	1,200	20.25 x 20.25
BURCH Hatching Egg Cooler	6000-10E	Room Heater, Humidifier	220	15200	55 F	1,850	20.25 x 20.25
BURCH Hatching Egg Cooler	9000-15E	Room Heater, Humidifier	220	16300	55 F	2,800	22.25 x 22.25
BURCH Hatching Egg Cooler	13000-20E	Room Heater, Humidifier	220	21800	55 F	3,850	24.25 x 30.25
BURCH Hatching Egg Cooler	18000-27E	Room Heater, Humidifier	220	28000	55 F	5,670	24.25 x 30.25
BURCH Hatching Egg Cooler	24000-32E	Room Heater, Humidifier	220	28900	55 F	7,560	32.25 x 36.25
BURCH Hatching Egg Cooler	50000-62E	Room Heater, Humidifier	220	61000	55 F	16,800	37.25 x 40.25

Table Egg Coolers

DESCRIPTION	MODEL	OPTIONS	VOLTS	BTU	MIN TEMP	EGG HOLDING ROOM CU FT	WALL ROUGH OPENING (H x W)
BURCH Table Egg Cooler	3000-5TE	Room Heater, Humidifier	115	5800	40 F	800	22.25 x 22.25
BURCH Table Egg Cooler	4000-6TE	Room Heater, Humidifier	220	8300	40 F	1,000	22.25 x 22.25
BURCH Table Egg Cooler	6000-10TE	Room Heater, Humidifier	220	15200	40 F	1,500	22.25 x 22.25
BURCH Table Egg Cooler	9000-15TE	Room Heater, Humidifier	220	16300	40 F	2,500	24.25 x 30.25
BURCH Table Egg Cooler	13000-20TE	Room Heater, Humidifier	220	21800	40 F	3,300	32.25 x 36.25
BURCH Table Egg Cooler	18000-27TE	Room Heater, Humidifier	220	28000	40 F	4,900	32.25 x 36.25
BURCH Table Egg Cooler	24000-32TE	Room Heater, Humidifier	220	28900	40 F	5,800	32.25 x 36.25
BURCH Table Egg Cooler	50000-62TE	Room Heater, Humidifier	220	61000	40 F	13,800	45.25 x 48.25

Burch Egg Cooler Room Doors

Burch Insulated Cooler Room Doors feature a wood jointed torsion frame to insure strength and long lasting performance. These engineered doors feature ample fiberglass insulation and an 18 gauge metal frame with a 22-gauge metal face, all powder coated for protection in harsh environments.

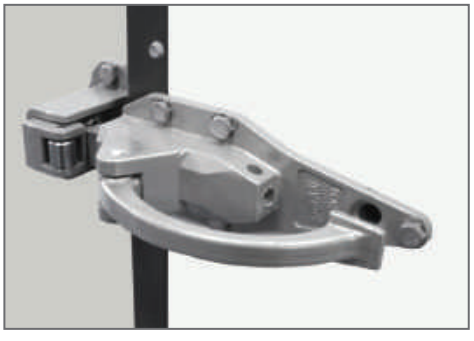

Each door includes heavy galvanized hinges, door handle, striker, safety pushrod and hex mounting lag screws. Standard and custom sizes available in Left or Right hand.

Note: With Left Hand Doors, the hinges are on the left and the door handle is on the right. With Right Hand Doors, the hinges are on the right and the door handle is on the left.

#3680 ..... 36" x 80" RH Swing/Opens to Outside
#48X84RH ..... 48" x 84" RH Swing/Opens to Outside
#52589 ..... 48" x 86" RH Swing/Opens to Outside
#5284884 ..... 48" x 84" RH Swing/Opens to Outside
#525196 ..... Sweep for Egg Cooler Room Door (Sold Per Foot)
#525881 ..... Latch Only For Burch Egg Cooler Door

GOLDEN EAGLE ELECTRIC START

#BG58500

The Golden Eagle Electric Start XL easily, effectively and economically dispenses oil based insecticides, fungicides, germicides, disinfectants, odor control and other chemical products.

The Golden Eagle features a revolutionary new electric starting system to assure greater reliability, effectiveness, fuel efficiency and ease of operation eliminating the need for manual starting.

- Formulation Output: 0–9 gallons/hr; 0–34 liters/hr; covers 57,000 cubic feet; 1600 cubic meters/min
- Droplet Size: 0.5 – 50 microns VMD
- Engine: 30 Hp; 22 kW; 18,900 Kcal/hr
- Fuel Consumption: 0.5 GPH; 1.9 liters/hr
- Weight Empty: 19 lbs; 8.6 kg. Full: 27 lbs; 12.2 kg
- Fuel Tank: 1.2 quarts; 1.0 liter
- Formulation Tank: 1.1 gallons; 4.2 liters
- Power Supply: Eight 1.5 V D size alkaline batteries. A rechargeable 12V DC battery (optional).
- Any 12V DC vehicle battery; connect to 12V receptacle with auxiliary battery cable.
- Dimensions: 52 x 9.5 x 14.5 inches; 132 x 24.1 x 36.8 cm (L x W x H)
- Shipping Data: 55 x 11 x 16 inches; 140 x 28 x 41 cm (L x W x H) 32 lbs; 14.5 kg 5.5 cubic feet; 0.15 cubic meters

DYNA-JET L-30 ELECTRIC ULV AEROSOL GENERATOR #CD65100

The world's most technologically advanced ULV applicator

Electric powered ULV generator. Digitally controlled highspeed rotary atomizer produces the industry's most consistently sized spray droplets not achievable by conventional nozzles. It features a unique remote controlled tilting head that allows for multi positioning of the spray. The lightweight, aluminum and stainless steel construction provides years of low maintenance and trouble free use. Because the Dyna-Jet® operates entirely on electric power, the unit is not susceptible to weight issues and maintenance expenses normally associated with gasoline powered equipment.

Features:

- High-volume axial blower 1,350 cubic ft./min. (38.3 cu. m/min) provides an extra-large swath width ensuring complete coverage.
- 15-gallon (57 liter) lockable formulation tank. Translucent design allows for quick level viewing.
- Super-accurate FMI pumping system features a lockable cover and Curtis Dyna-Fog's exclusive Formulation Anit-Pulsing System (FAPS™)
- Remote-control features: tilt angle adjustment, machine on/off, spray on/off, formulation/flush selector, battery/hour meter
- Quick release stainless steel vehicle mounting brackets
- Patented articulating spray head powered via remote control
- Water-resistant batter enclosure features chemical resistant stainless steel restraints.
- 180° Rotational support (manually operated).
- High-strength anodized aluminum frame and stainless steel base construction. Chemical resistant powder coated surfaces keeps the machine looking like new.

Specifications:

- Formulation Output Maximum pre-set flow rate: 14 ml/min; 414 ml/min
- Droplet Size: 90% of droplets below 24 microns VMD
- Engine Atomizer motor: 12 V DC, brushless, high speed shielded bearings, water resistant cover
- Current draw: 30 Amps maximum at 14 ml/min; 414 ml/min
- Note: Battery is not included with the machine and is sold separately
- Blower: High-output, 1,350 cubic feet; 38.2 cubic meters
- Pump Systems: Positive displacement, FMI ceramic piston pump, stainless steel housing; formulation anti-pulsing system (FAPS), tamper resistant, lockable cover
- Nozzles: High-speed rotary atomizer type
- Weight Empty: 105 lbs; 47.6 kg. With battery: 147 lbs; 66.5 kg
- Formulation Tank and Filter: 15 gallons; 57 liters; with lockable cap 25 micron large capacity filter
- Flush Tank: 1 gallon; 3.8 liters

Options:

- 12 V heavy-duty battery 12 V high-performance battery with AC charging kit
- Syncroflow Radar Flow Control, Dyna-Trax GPS tracking system, Digital tachometer, AC timer kit
- Large capacity filter kit,
- Application specific formulations filters
- Water resistant machine cover

Dimensions:

- 44 x 29 x 39 inches; 112 x 74 x 99 cm (L x W x H)

Shipping Data:

- 46 x 36 x 46 inches; 117 x 91 x 118 cm (L x W x H) 223 lbs; 101.6 kg

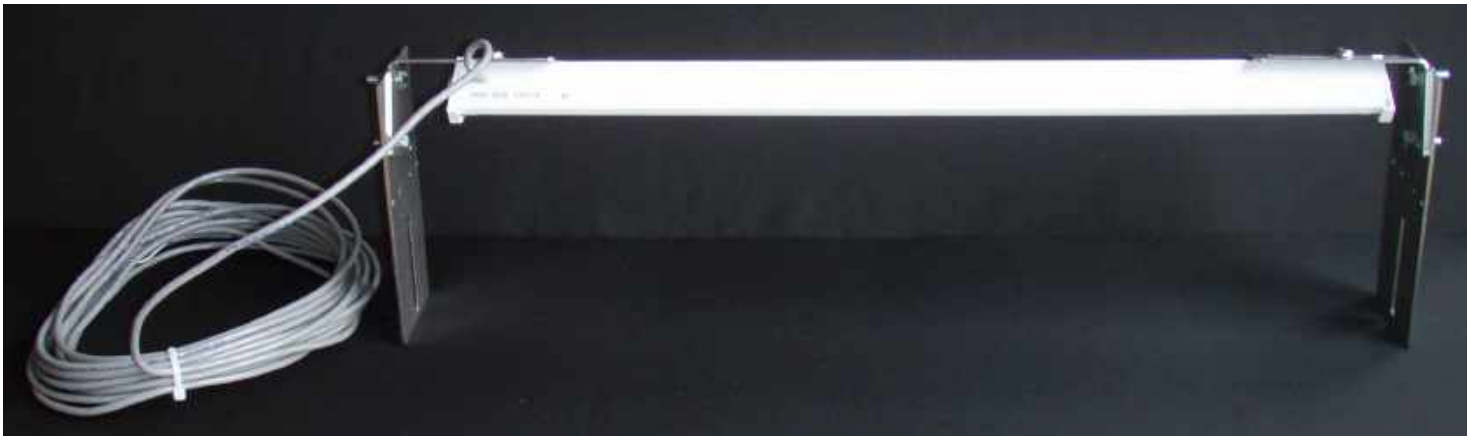

IR12-40 MASS EGG COUNTERS

This egg counting system has been specially developed to accurately count eggs in any arrangement on a rod or conveyor. The IR12-40 sensor can detect and count side-by-side eggs. These counters can be combined with an egg counting computer, climate computer or a power supply with display for a stand alone unit. The IR12-40 mass counters use infrared technology to count eggs. These mass counters may be used to count eggs on a conveyor. The mass counters can be use on conveyors from 12" to 40" wide and can be set to count 1 pulse per dozen eggs or 1 pulse per 2 dozen eggs.

- Infrared Technology – Eggs are not touched, eliminates damages, soiling and blockages
- Highly accurate
- Counts multiple eggs at once – No separation needed
- Electronics are environmentally sealed – Not necessary to remove for cleaning
- Low energy usage
- Compact style
- Conveyor speed – 0-50 feet per minute
- Unaffected by background objects – Will not mistake other objects as eggs
- Can be combined with stand alone power supply with display
- Can be combine with Fancom 746 Control Computer for more detailed analysis and comparisons

Item#	Description
IR16E-8	Mass Electronic Egg Counter, 16-inch
IR20E-8	Mass Electronic Egg Counter, 20-inch
IR24E-8	Mass Electronic Egg Counter, 24-inch
IR28E-8	Mass Electronic Egg Counter, 28-inch
IR32E-8	Mass Electronic Egg Counter, 32-inch

Item#	Description
IR36E-8	Mass Electronic Egg Counter, 36-inch
IR40E-8	Mass Electronic Egg Counter, 40-inch
IR44E-8	Mass Electronic Egg Counter, 44-inch
IR48E-8	Mass Electronic Egg Counter, 48-inch
IR60E-8	Mass Electronic Egg Counter, 60-inch

IR6-12 MASS EGG COUNTERS

The IR6-12 counters can be use on conveyors from 6" to 12" wide and can be set to count 1 pulse per egg or 1 pulse per dozen eggs.

Item#	Description
IR6E-8	Mass Electronic Egg Counter, 6-inch
IR8E-8	Mass Electronic Egg Counter, 8-inch
IR12E-8	Mass Electronic Egg Counter, 12-inch

IR3E-4E MASS EGG COUNTERS

The IR3e counter's sensor spans 3" and is best used to count eggs on egg belts. The IR4e counter's sensor spans 4" and may be used to count eggs on eggs belts or a conveyor.

Item#	Description
IR3E-8	Mass Electronic Egg Counter, 3-inch
IR4E-8	Mass Electronic Egg Counter, 4-inch

LUBING

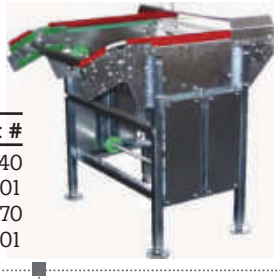

FRONT DRIVE UNIT

Model	Part #
T350	4840
T500	4801
T750	4870
T1000	5401

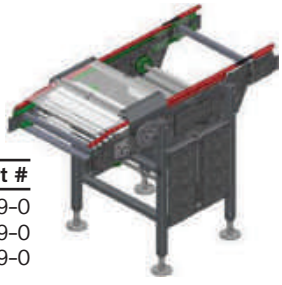

TRANSFER DRIVE UNIT

Model	Part #
T500	4839-0
T750	4899-0
T1000	5439-0

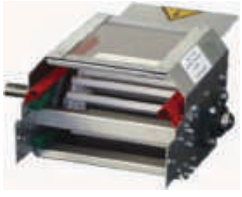

MINI DRIVE UNIT

Model	Part #
T250	4901
T350	4841
T500	4802
T750	4871
T1000	5402

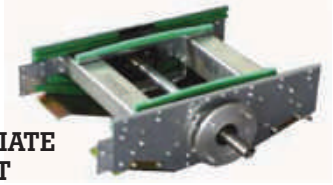

INTERMEDIATE DRIVE UNIT

Model	Part #
T250	4935
T350	4868
T500	4835
T750	4898
T1000	5435

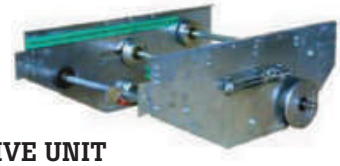

END DRIVE UNIT

Model	Part #
T350	4842
T500	4803
T750	4872
T1000	

PIVOTING UNIT

Model	Part #
T250	4905
T350	4844
T500	4805
T750	4874
T1000	5405

ENDPIECE WITH TENSIONER

Model	Part #
T250	4906
T350	4845
T500	4806
T750	4875
T1000	

END UNIT

Model	Part #
T250	4907
T350	4846
T500	4807
T750	4876
T1000	5407

IDLER UNIT WITH TRANSFER WHEEL

Model	Part #
T250	1860050210
T350	1870050210
T500	1850050210
T750	1880050210
T1000	1910050210

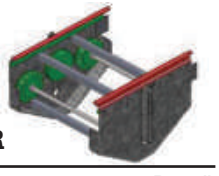

BOLT-IN TENSIONER

Model	Part #
T250	1860055001
T350	1870055001
T500	1850055001
T750	1880055001
T1000	1910055001

TELESCOPIC UNIT

Model	Part #
T350	4865
T500	4830
T750	4890

LUBING

BEND

Model	Part #
90 DEGREE	
T250	4912
T350	4851
T500	4812
T750	4881
45 DEGREE	
T250	4913
T350	4852
T500	4813
T750	4882

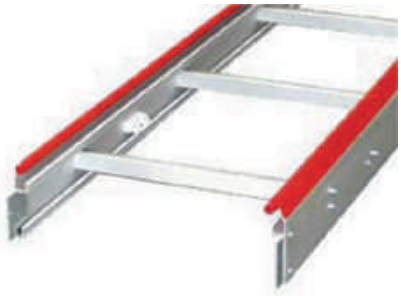

CONNECTING PART CLOSED

Model	Part #
3-Meter	
T250	4908
T350	4847
T500	4808
T750	4877
2-Meter	
T250	4909
T350	4848
T500	4809
T750	4878
T1000	5409

CONNECTING PART OPEN

Model	Part #
3-Meter	
T200	L4947
T250	4910
T350	4849
T500	4810
2-Meter	
T200	L4948
T250	4911
T350	4850
T500	4811
T750	4880

DIRT PLATE - 1M WIDE

Model	Part #
T250	4915
T350	4750
T500	4714
T750	4780

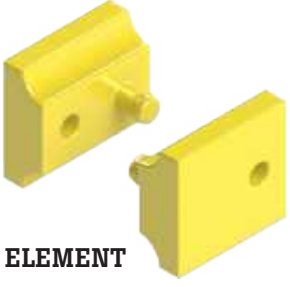

SECURITY ELEMENT

• 1 PAIR

Model	Part #
-	1855400402

CLOSING ROD - STANDARD

• With Screw

Model	Part #
T500	4824-1
T750	L4894-1
T1000	5423-1

MOTOR

Item#	Description
LG581	1/2 HP 3PH 208-230/460 60HZ VFD
LG580	1/3 HP 3PH 208-230/460 60HZ VFD

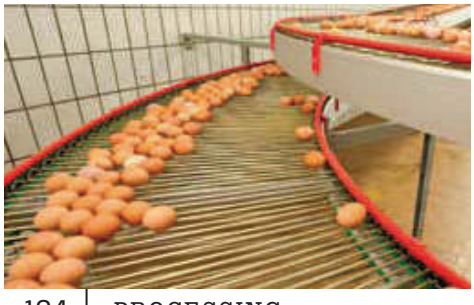

CLOSING ROD

Model	Part #
Standard	
T250	4924
T350	4864
T500	4824
T750	L4894
T1000	5423
Hybrid	
T250	5924
T500	5824
T750	5894
T1000	5464
Hybrid	
T500	4833
T750	4893

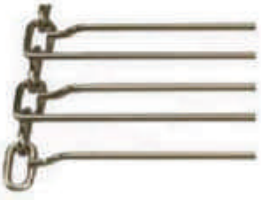

CONVEYOR CHAIN

• (10m ROLL)

Model	Part #
Standard	
T200	L4961
T250	4921
T350	4861
T500	4821
T750	4891
T1000	5421
Hybrid	
T250	5921
T500	5821
T750	5892
T1000	5461
Plastic Covered	
T500	4832
T750	4892

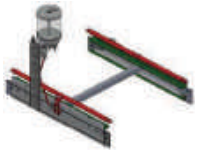

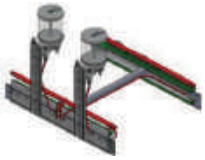

DRIP OILERS

Model	Part #
TOP DRIP 120V	
T250	7051271100
T350	7061271100
T500	7071271100
T750	7081271100
TANDEM DRIP 120V	
T250	7051272100
T350	7061272100
T500	7071272100
T750	7081272100

Model	Part #
TOP DRIP	
T250	7051271200
T350	7061271200
T500	7071271200
T750	7081271200
TANDEM DRIP 240V	
T250	7051272200
T350	7061272200
T500	7071272200
T750	7081272200

SUPPORTS

Model	Part #
SUPPORT - 39 IN	4918
SUPPORT - 78 IN	4919
SUPPORT - 97 IN	4920

GEARBOX

Item#	Description
LS-87-3	Stober 87.3:1

CHAIN CONVEYOR

Item#	Description
L4891	Model T750 Standard 33 ft./roll

FLOOR SUPPORT - SHORT

• (MAX. 12.60 IN / MIN. 7.50 IN)

Model	Part #
-	4815

CLOSING ROD

Item#	Description
L4894	T750 Standard

ELEMENT SECURTITY CONVEYOR

Item#	Description
L1855400402	Lubing 200 (2 per EACH)

FLOOR SUPPORT - MIDDLE

• (MAX. 19.30 IN / MIN. 12.20 IN)

Model	Part #
T250	4916
T350	4855
T500	4816
T750	4885

DIVERTER ASSEMBLY

• (60 IN DIVERTER)

Model	Part #
T350	7061700100
T500	7071700100
T750	7081700200
T1000	7091700100

GUIDE UNIT

Model	Part #
T350	4858
T500	4828
T750	4888

CROSS STRUT FOR TELESCOPIC UNIT

Model	Part #
-	4819

BRUSKE SQUEE-GEE

Lightweight, high performance, completely disposable, extruded plastic wiping blade available in both straight and curved blades. Both blade styles feature a rigid plastic backing that is bonded to a flexibly high-quality plastic wiping blade to eliminate the need for a metal channel or support.

- Straight Squee-Gees require squeegee-to-handle adapters.
- Curved Squee-Gees come complete with squeegee-to-handle adapters.

Squee-Gee Size	24″	36″
Straight Squee-Gee	BP49524	BP49536
Curved Squee-Gee	BP49624	BP49636

FINE BLACK BRULON CASING WITH RED BRULON CENTER BRISTLES

For lightweight sweeping on smooth surfaces.

Brush Size	24″	36″
Brush Model	BP3324	BP3336

COARSE 100% SOLVENT RESISTANT BROWN POLYSTYRENE BRISTLES

For the most rugged sweeping chores under all conditions. Staple set with 4″ trim.

Brush Size	24″	36″
Brush Model	BP3724	BP3736

MEDIUM GREEN BRULON CASING WITH BROWN BRULON CENTER BRISTLES

Outstanding sweeping tool, due to its longer and rugged synthetic bristles.

Brush Size	24″	36″
Brush Model	BP324324	BP34336

ALL METAL BRACE

For use with 24″ and 36″ Bruske Floor Brushes.

Item#	Description
BP9302	Bruske All Metal Brace

HEAVY STEEL HANDLE

- For Bruske Brushes and Squee-gees
- 60″ Length, 1-1/8″ Diameter

Item#	Description
BP6131	Bruske Heavy Steel Handle

Interested in Spool Bars?
Call 641-426-6849
Custom Sizes Available.
Colors available upon request.

ITEM #	DESCRIPTION	SIZE	MATERIAL
DP01825-965	Egg Roller	25-3/4", 75A	PVC OAL Black Nylon Pins
DP01829-25	Egg Roller	29.25", 75A, 9 Cradles	PVC OAL Black Nylon Pins
DPMN011	Egg Roller	53.75", 18 Cradles	PVC OAL Black Nylon Pins
DPEBPR	Egg Belt Pinch Roller	80A	Urethane
DPER-S29250	Egg Roller Blue	29-1/4", 75-A, 9 Cradles	PVC OAL Black Nylon Pins
DPER-D35875	Egg Roller Black	35-7/8", 75-A	PVC OAL Black Nylon Pins
DPER-K34313	Egg Roller Blue	34.313", 65-A	PVC OAL Black Nylon Pins
DPER-D135875	Egg Roller Black	35-7/8", 75-A	PVC OAL Black Nylon Pins
DPER-D126625	Egg Roller Black/White	.185	PVC OAL Black Elastom Pin

SPOOL BAR CHAIN

Item#	Description
C2040SS-51	Riv 6000 SS D1EV2ND Roller Chain - 51' roll
C2040SS-102	Riv 6000 SS D1EV2ND Roller Chain - 102' roll
C2040SS-CL	Riv 6000 SS D1EV2ND Connecting Link
N0320-1	35 Riv Roller Chain - 50'
N0404-1	40 Riv Roller Chain - 50'
N0445-1	41 Riv Roller Chain - 50'
N0614-1	60 Riv Roller Chain - 50'

BELTING

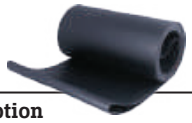

Item#	Description
K25-37	10" x 177" w/Lacing Diamond Packer

800 SERIES CAST-IRON RIGHT ANGLE GEAR REDUCER

Item#	Description
GRG8320160-00	Output Shaft Configuration: Right
GRG8320152-00	Output Shaft Configuration: Left

PARALLEL GEARMOTOR

LEESON Parallel Shaft Gearmotor is totally enclosed for continuous duty, general purpose applications. Permanent split capacitor designs are rated for 115/230VAC, 60/50 Hertz input, and have starting torques equal to the running torques. The in-line gearing is of precision machined steel, with first stage steel helical gear followed by spur type gears. Lubrication is by semi-fluid grease, reducing possibility of leakage and providing permanent lubrication. Output shafts have needled bearings for high load capacities. Shafts are hardened steel.

⚠ WARNING:
This product can expose you to chemicals, including nickel, which is known to the State of California to cause cancer and birth defects or other reproductive harm. For more information, go to www.P65Warnings.ca.gov

LEESON 38 FRAME SUB-FHP CONDUIT BOX

Steel conduit or junction box. The box is painted and mount in holes using screws provided with all stock gearmotors. NOTE: Conduit boxes must be matched with Type & Frame sizes.

ITEM#	HP	RPM	FRAME	VOLTAGE	SERVICE FACTOR	SHAFT SIZE	PHASE	SPEED	WT.
LM1145032-00	1/6	40	56C	208/230-460	1.6	5/8"	3	Variable	33

WATT SAVER MOTOR

- Steel construction
- (TEFC) Totally Enclosed Fan Cooled motor
- Class F insulation
- Inverter Duty Insulation System
- UL Listed and CSA certified
- NEMA Premium efficiency with 3 year warranty

⚠ WARNING:
This product can expose you to chemicals, including nickel, which is known to the State of California to cause cancer and birth defects or other reproductive harm. For more information, go to www.P65Warnings.ca.gov

ITEM#	HP	RPM	FRAME	VOLTAGE	SERVICE FACTOR	SHAFT SIZE	PHASE	SPEED	WT.
L102696	1/3	1725	56C	208/230-460	1.25	5/8"	3	Variable	20

WASHGUARD SST MOTOR

Built with all stainless steel external components to prevent corrosion and well-sealed against moisture and condensation to protect internal components, the WASHGUARD SST all-stainless motors are able to withstand the severe wash-down environments found in food processing industries.

- Extended Thru-bolts
- Auto Reset Protectors
- TEAO designs
- Laser etched full-fact nameplate on frame
- All Stainless exterior
- Anti-corrosion coating applied to interior components

#N9328

#LE103389

⚠ WARNING:
This product can expose you to chemicals, including nickel, which is known to the State of California to cause cancer and birth defects or other reproductive harm. For more information, go to www.P65Warnings.ca.gov

ITEM#	HP	RPM	FRAME	VOLTAGE	SERVICE FACTOR	SHAFT SIZE	PHASE	SPEED	WT.
N9328	1	1800	143TC	208/230-460	3.0	5/8"	3	Variable	47
L191205	1/2	1740	56C	208/230-460	1.6	5/8"	3	Variable	33
LE103389	1/2	1800	56C	230/460	-	5/8"	3	Variable	-

Index

A-C

Adjust-A-Baffle 41
Aerotech Fans 39
Air Diverters 68
Anchor, Bearing 9
AP
  Curtain Machine 55
  Fans 29
Astroturf 123
Auger 11
Bait Stations 117
Barngard Doors 124
Barn Talk 28
Batteries 111
Bayer 113
Bearings
  Collector Systems 25
  Fan Bearings 37
Bin Trac 5
Biosecurity Products 104-109
Boots 106-107
Boot Covers 106
BridgRid 6
Brooms 136
Burch Coolers 130
Burn-Easy Incinerators 126
Cable 66, 96
Cable Cutters 66
Chain, Feeding 16-17
Chemilizer 89
Chicken Catchers 123
Chore Carts 123
Chore-Time
  Curtain Machine 57
  Collector Systems 20-22
  Fans 38
Coolair 41
Cool Cell Pumps 54
Coveralls 105
Curtains 59
  Machine 55-58
  Hardware 60-61
Cumberland Watering Systems 79

D-E

Disinfectants 109
Disinfectant Mat 109
Dosatron 86-88
Drinker Nipples 80-83
Ear Plugs 105
Egg
  Belt 19
  Belt Accessories 19
  Collector 21
  Cooler 129-130
  Counter 134
  Peg 24
Electrical 100-103
Evaporative Pad 50

F-G

Fans
  Aerotech Fans 39
  Airstorm 29-33
  AP 40
  Bearings 37
  Belts 46, 48
  Box Fan 38
  Cumberland 38
  Circulation Fans 36
  Coolair 41
  Motors 49
  Shutters 42
  Stir Fans 36
  Shades 43
  Windstorm 34, 36, 38
Feed
  Bins 4
  Fill Systems 7-12
  Motors 12
Fly Bait 113-115
Fogger Systems 129
Gear Heads 12
Gloves, Disposable 105
Gorilla Tape 110
GroBelt 48
GrowerSelect
  Curtain Machine 55
  Evap Systems 53
  Fans 29-34
  Feed Chain Corner 16-17
  Feed System 10-15
  Motors 12, 49
  Multiflo Drive Unit 15
  Nest Systems 27

H-L

H2Pad 50
Heating 68-77
Hen Slat 26
High Pressure Spray Systems 128
Hydrated Lime 123
Incinerators 125-126
Insecticide 112-113
LED Lights 97
Light Bases 99
Lighting 88-99
Line Cleaners 120
Link Belt 22, 46
Lubing
  Rod Conveyor 133-135
  Watering Systems 79-84
Lubricants 111

M-R

Manure
  Scraper Cable 96
  Belt 95
  Motors 96
  Welder 96
Masks, Face 104
Medicators 86-90
Motors
  Auger 12-13
  Collector Systems 20
  Fan 49
Micro Switch 101
Multiflo Drive Unit 15
Nest 27
Nest Pads 123
Plastic Film 123
Plumbing 91-94
Poultry Wire 61
Pressure Washing 128
Pulleys 47
PVC Fittings 94
QuickBayt 113
Rain Suit 108
Rat Bait 116-119
Roller Chain 127

S-T

Shutters 42
Spool Bar Chain 137
Spool Bar 137
Sprockets 21
Squee-Gee 136
Stand Pipe Tube Kits 81
StarBar 114
Stenner Pump 90
Thermalarm 44
Thermostat 67
Tong Stik 123
Torque Nuts, Fans 40
Tunnel Shutters 43

U-W

Unloaders 7-8
V-Belts 22
Val Watering Systems 80-81
VFD Fan Control 35
Water
  Meters & Regulators 78-79
  Filters 93
  Hose 92
  Supplements 120
Winches 62-63
Wire 103

Sales Contacts for New Construction and Remodeling

Worry-Free, Hassle-Free Construction. Completed start to finish from the experts in building better farms!

MIDWEST SWINE

Iowa - Wisconsin

Chad Grouwinkel	Midwest Sales Manager	515-368-2730
Steve Poland	Carroll, IA	712-830-0322
Matt Rohrig	Orient, IA	641-344-8869
John Boleyn	Humboldt, IA	515-368-0636
Brian Long	Algona, IA	515-320-3880
Jason Billings	Lancaster, WI	515-368-0413

Minnesota

Mark Perkins	Cleveland, MN	507-381-8644
Mike Thode	Pipestone, MN	507-820-2552

Kansas - Nebraska - South Dakota

Andy Borer	Columbus, NE	402-741-2184
Mark Stender	Elk Point, SD	712-221-7661
Gary McDuffee	Columbus, NE	402-270-3279

Missouri - Arkansas

Terry Fox	Decatur, IA	641-344-9898
Steve Salsman	Wentworth, MO	417-737-2093

Illinois - Indiana - Michigan - Kentucky - Ohio

Ross Thompson	Normal, IL	309-831-6881
Jake Erickson	Indianapolis, IN	260-224-4051
Eric Reed	Three Rivers, MI	269-587-0420
Pat Williams	Ohio	937-423-1159

West/Southwest

Kevin Braden	General Manager Guymon, OK	620-202-2882
Kevin Dickerson	Guymon, OK	580-338-5003

MIDWEST POULTRY

Arkansas - Missouri - Iowa - Minnesota - Nebraska - Oklahoma - Wisconsin

Matt Holdeman	Midwest Sales Manager	515-890-4028
Colby Elliott	IA, MN & WI	641-220-1220
Dean Sowers	Sauk Center, MN	320-527-3298
Chad Buhl	Nebraska	402-276-6453
Bobby Cox	Spiro, OK	479-629-6983
Mike Sears	AR/MO Regional Manager	479-435-4255
Matt Goforth	Siloam Springs, AR	417-238-2229
Ricky Bryan	Fort Smith, AR	479-222-4662
Monte Rhodes	MO, Cage-Free Layer Equipment	660-620-0541

EGG LAYER

Dane Schipper	Midwest Sales Manager	641-426-6849
Dave Nicks	Midwest/Western US Region	712-540-9327
Aaron Moystner	OH, MI & IN	260-251-2390

EASTERN SHORE POULTRY

Jim Karsnitz	Regional Sales Manager	410-251-1687
Spencer Hill	Delaware/Maryland	302-258-8457
Adam Mariner	Maryland/Virginia	302-604-2050

SHENANDOAH AG SUPPLY

Frank Pileski	VA	540-480-6030
Andrew Robyak	WV/VA	717-756-2730

NORTH CAROLINA SWINE

Fritz Richards	National Sales Manager	910-590-6366
Kenny Bass	North Carolina	910-590-9523
Luke Clark	North Carolina	910-214-9323
Shelton Johnson	North Carolina	910-590-9025
Pat Usher	North Carolina	910-990-1413
Frankie Warren	North Carolina	919-738-0124

NORTH CAROLINA POULTRY

Vann Pierce	Regional Sales Manager	252-287-5002
Walt Pope	Rose Hill,NC	910-214-6158
Chancey Walker	Beulaville, NC	910-590-6411
Kere Wade	Ahoskie/Aulander, NC	252-287-9927
Robert Herman	Taylorsville, NC	828-302-5950
Brian Saunders	Hartsville, SC	910-974-0753
Chuck Sutton	NC/SC/DE/MD/VA Sales Manager	252-370-0807
Bryan Price	NC/SC	843-253-6146

SOUTHEAST POULTRY

Georgia - Tennessee - Alabama - Arkansas

Doug Scroggs	Sales Manager	706-244 5428
Jacob Williams	Calhoun, GA	706-988-4416
Madison Williams	Roberta, GA	919-920-7084
Timmy Gee	Royston, GA	706-498-0950
Paul Butcher	Shelbyville, TN	931-993-2305
Daniel Welborn	Holly Pond, AL	256-460-9504
Ricky Bryan	Ft. Smith, AR	479-222-4662
Matt Goforth	Siloam Springs, AR	417-238-2229
Heath Hill	Regional Sales Manager/Alabama	256-412-3467

Mississippi - Louisiana - Texas

Patrick Harrison	Sales Manager	601-443-1688
Ricky Holmes	Carthage, MS	601-507-0759
Derin Bonner	Summit, MS	601-248-0200
Wayne Jones	Texas	903-717-4642

Western Kentucky - Tennessee

Tyson Nightingale	Mayfield, KY	270-970-9835

INTERNATIONAL SALES

Jeff Smith	International Swine, *Se Habla Español*	910-214-9569
Eric Soza	International Swine, *Se Habla Español*	910-305-3386
Gregg Jackson	International Poultry	336-406-2348

CANADA - MITCHELL, ONTARIO

Jack Lepelaars	Manager	519-348-8483
Steve Poppe	Swine	519-301-7308
Andy Thalen	Swine/Poultry	519-292-6045
Jim Thalen	Swine/Poultry	226-622-4805

ORDERING INFORMATION

Monday-Friday 8:00am to 5:00pm C.S.T. • Fax your order 24 hours a day, 7 days a week.
Hog Slat Midwest FAX @ 515-332-3126 • Hog Slat S. E. • FAX @ 910-594-0010 • Georgia Poultry FAX @ 706-245-0496.

Orders placed before 1:00pm will be shipped the same day. Please have item number ready when ordering. Shipping charges will be calculated based on the weight of your order and the distance it must travel.

METHODS OF PAYMENT

- **Visa, MasterCard, Discover/Novus and John Deere Financial**
- **C.O.D's are available by UPS with an additional charge of $10.00 per package**
- **Pre-Payment - Please call for freight cost**
- **Items too large for UPS will be shipped by motor freight**
- **Next-day and second-day air deliveries available at an additional charge**
- **Freight charges are the customer's responsibility**
- **Report any damaged merchandise to UPS upon delivery**
- **Due to manufacturer's updating prices, products and specifications, prices are subject to change without notice**
- **Some items in this circular may require some assembly or installation, which is available at an additional cost at your nearest Hog Slat parts and service department.**
- **Items are subject to availability**
- **We reserve the right to limit quantities and correct printing errors.**

These items were selected in advance based on warehouse availability. In the event we are out of any particular item, every item can be ordered for you at the advertised price unless specifically noted otherwise. **RETURN POLICY:** Please call for authorization to return merchandise. All items must be returned within 30 days from the date of purchase. Items must be returned in clean and saleable condition. Special order items are not returnable. All returns are subject to a restocking fee.

GEORGIA® POULTRY EQUIPMENT CO.

HOG SLAT®

EASTERN SHORE Poultry services

VISIT US ONLINE @ HOGSLAT.COM

HOG SLAT, INC.
PO Box 300
Newton Grove, NC 28366
IA: 866.464.7528
NC: 800.949.4647
GA: 866.850.4446
PARA ESPAÑOL LLAMENOS: 866-364-7528

EGG BELT

Page 19

NEW!

HEN SLAT

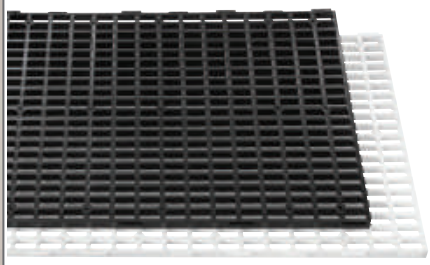

HEN SLAT

Page 26

NEW!

BARN TALK

Page 28

NEW!

POULTRY WATER LINE PRESSURE REGULATOR

Page 78

COVERALLS

Pages 105

SQUEE-GEE

Page 136